Kit 75536

BMW E36 Chassis

Front Application

INSTALLATION GUIDE

For maximum effectiveness and safety, please read these instructions completely before proceeding with installation.

Failure to read these instructions can result in an incorrect installation.

MN-819 • (011302) • ERN 7475

TABLE OF CONTENTS

Introduction 2
Notation Explanation 2

Important Safety Notices 2

Installation Diagram 3
Hardware List 3

Installing the Air Suspension 4
Preparing the Vehicle 4
Removal of Stock Suspension 4
Installing the Kit Components 6
Routing Air Lines 8

Tips for Installing the Air Lines 9
Cutting Air Lines 9
Push-to-Connect (PTC) Fittings 9
Checking for Leaks 9
Fixing Leaks 9

Before Operating 10
Setting the Ride Height 10
Torque Specifications 10
Suggested Driving Air Pressure and Maximum Air Pressure 10
Check for Binding 11
Damping Adjustment 11
Aligning the Vehicle 11
Adjusting Extended or Drop Height Using Lower Mount 12
Installation Checklist 13
Post-installation Checklist 13

Use, Maintenance and Servicing 14
Tuning the Air Pressure 14

Limited Warranty and Return Policy 17

Replacement Part Information 17

Contact Information 17

Introduction

Air Lift Performance thanks you for purchasing the most complete, fully engineered high-performance air suspension made for the BMW E36. Read these installation instructions to correctly and safely set up the vehicle for a #lifeonair.

Air Lift assumes that the installer has the mechanical knowledge and ability to work on vehicle suspension systems and has basic tools necessary to complete the project. Special tools needed to complete the installation are noted on the Installation Diagram page.

Air Lift reserves the right to make changes and improvements to its products and publications at any time. For the latest version of this manual, contact Air Lift Performance at **(800) 248-0892** or visit **www.airliftperformance.com**.

An Air Lift Performance air management system is highly recommended for this product. Learn more at **air-lift.co/productlines**.

NOTATION EXPLANATION

Hazard notations appear in various locations in this publication. Information which is highlighted by one of these notations must be observed to help minimize risk of personal injury or possible improper installation which may render the vehicle unsafe. Notes are used to help emphasize areas of procedural importance and provide helpful suggestions. The following definitions explain the use of these notations as they appear throughout this guide.

⚠ DANGER INDICATES IMMEDIATE HAZARDS WHICH WILL RESULT IN SEVERE PERSONAL INJURY OR DEATH.

⚠ WARNING INDICATES HAZARDS OR UNSAFE PRACTICES WHICH COULD RESULT IN SEVERE PERSONAL INJURY OR DEATH.

⚠ CAUTION INDICATES HAZARDS OR UNSAFE PRACTICES WHICH COULD RESULT IN DAMAGE TO THE MACHINE OR MINOR PERSONAL INJURY.

NOTE *Indicates a procedure, practice or hint which is important to highlight.*

Important Safety Notices

⚠ WARNING DO NOT INFLATE AIR SPRINGS WHILE OFF OF THE VEHICLE. DAMAGE TO ASSEMBLY MAY RESULT AND VOID WARRANTY.

⚠ CAUTION DO NOT WELD TO OR MODIFY PERFORMANCE STRUTS/SHOCKS IN ANY WAY. DAMAGE TO UNIT MAY OCCUR AND WILL VOID WARRANTY.

Installation Diagram

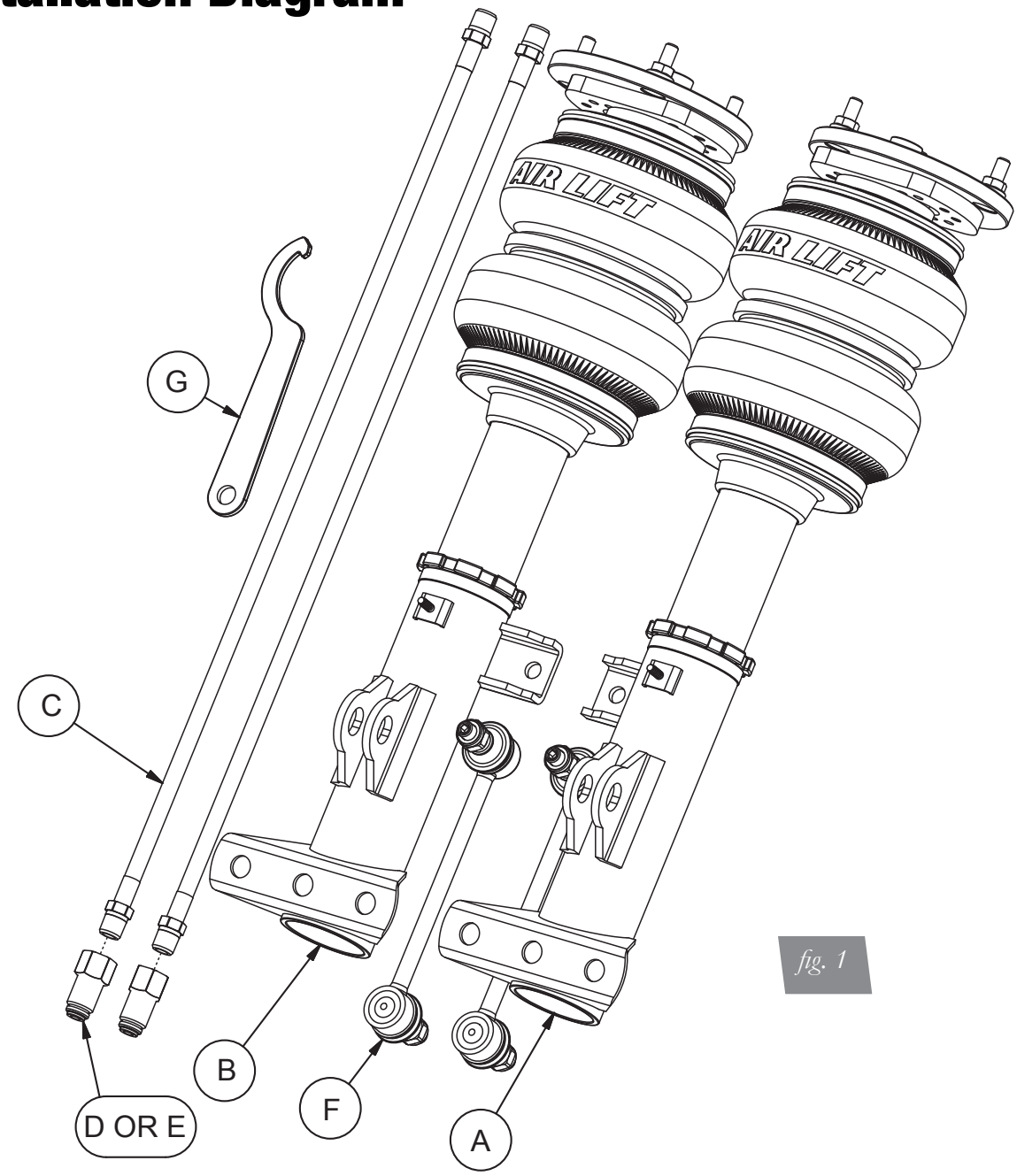

fig. 1

HARDWARE LIST

Item	Part #	Description	Qty
A	35226	Strut assembly, E36 front right	1
B	35227	Strut assembly, E36 front left	1
C	20997	Leader hose, 1/4” ID	2
D	21810	Union, 1/4” FNPT X 1/4” PTC, DOT	2
E	21987	Union, 1/4” FNPT X 3/8” PTC, DOT	2
F		Sway bar end link - 170mm	2
G		Spanner wrench	1

STOP! Missing or damaged parts? Call Air Lift customer service at (800) 248-0892 for a replacement part.

Installing the Air Suspension

PREPARING THE VEHICLE

1. Support the vehicle with jack stands or a hoist at approved lifting points.
2. Remove the front wheels.

REMOVAL OF STOCK SUSPENSION

1. Detach the brake line/ABS sensor and brake pad sensor wire from the strut body (Fig. 2). To prevent tension on the wires in steps ahead, open the plastic wire holder panel on the inner fender well and unclip the wires from this panel (Fig. 3). The added slack in the wires will be helpful when removing the strut.

fig. 2

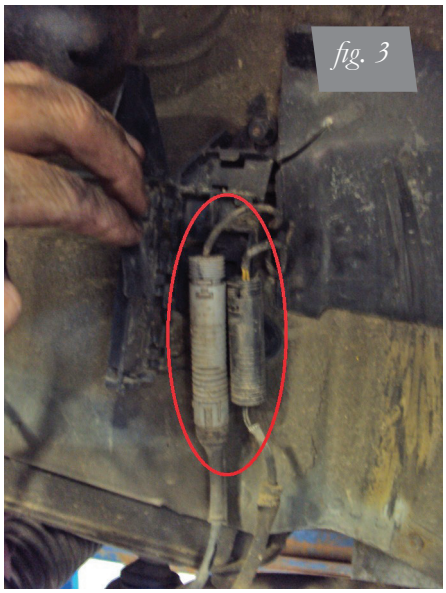
fig. 3

2. Stabilizer link (Fig. 4):
   a. M3 models: remove the stabilizer link from the strut body and stabilizer bar. Replacement stabilizer links are supplied with kit.
   b. All other models: replacement stabilizer links are included in the kit to change the mounting location to M3 style mounting. If you wish to run the M3 style stabilizer link, detach the stock link from the stabilizer bar and lower control arm.

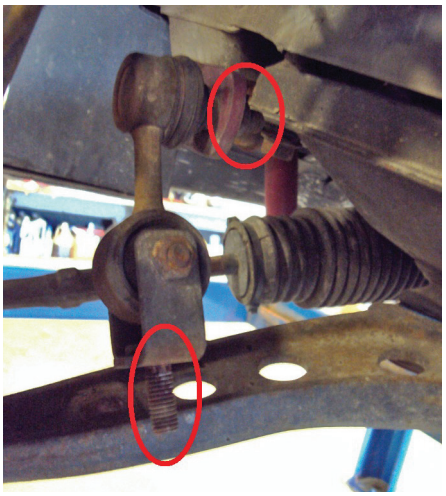
fig. 4

3. Support the steering knuckle and remove the three bolts attaching to the strut (Figs. 5-8).

fig. 5

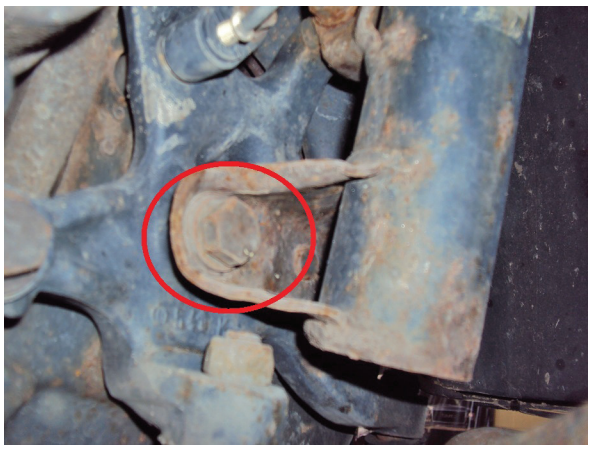

fig. 6

fig. 7

fig. 8

4. Unthread the three upper bracket nuts and remove the strut from the vehicle.

INSTALLING THE KIT COMPONENTS

1. Begin by installing the leader hose into the air spring (Fig. 9). Wrap the threads of the leader hose with thread sealant. Tighten the appropriate fitting to the air line 1 3/4 turns beyond hand tight. Tighten the leader hose into the air spring 1 3/4 turns beyond hand tight.

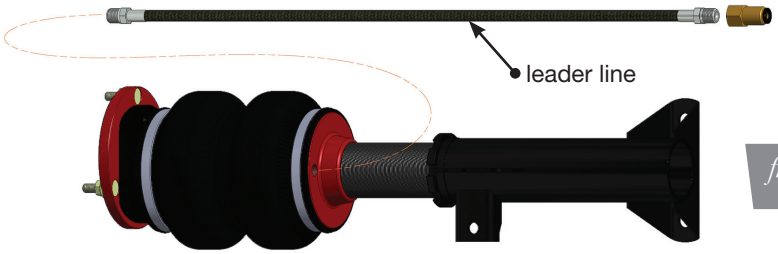

fig. 9

2. Struts are left and right specific (Fig. 10). Make sure the correct strut is being installed. Insert the strut into the strut pocket with the camber/caster adjustable plates installed as shown in Figure 10. Tighten camber/caster plate nuts to 24Nm (18lb.-ft.).

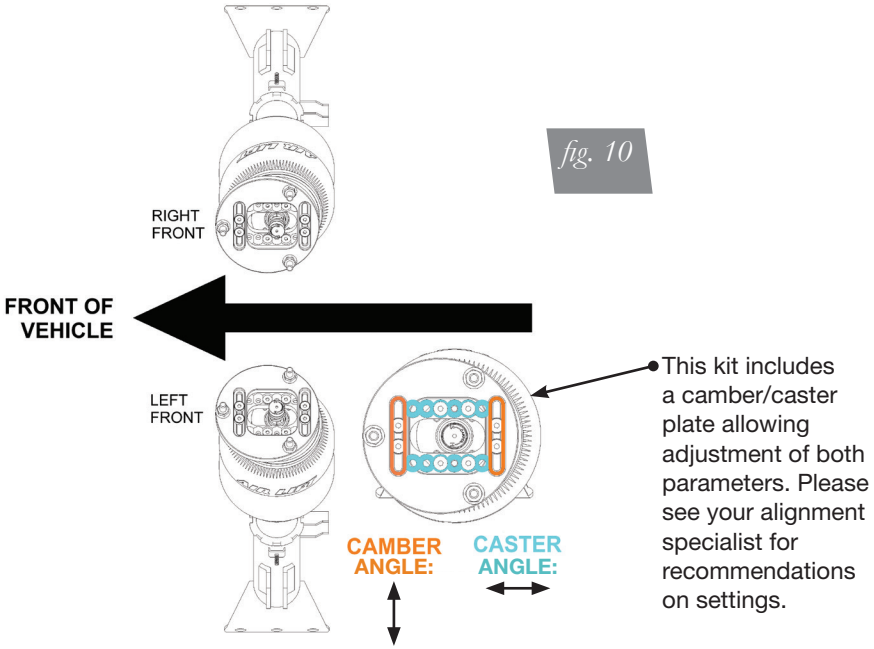

fig. 10

3. Lift and reattach the steering knuckle to the strut (Figs. 11 & 12). Torque bolts to 107Nm (79 lb.-ft.).

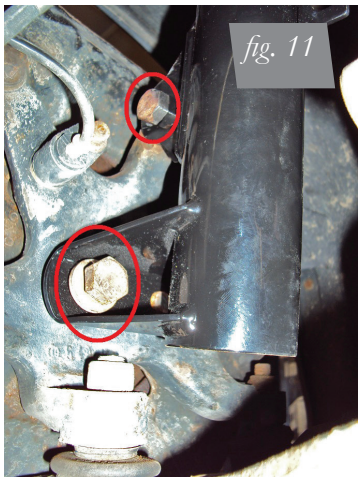

fig. 11

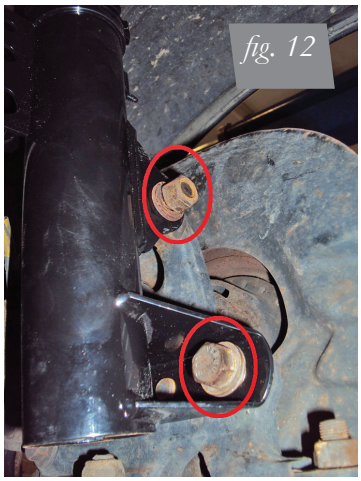

fig. 12

4. M3 models (optional for all others): install the new stabilizer link to the strut and stabilizer bar. Disconnecting the opposing side stabilizer link when installing the new link will ease the process. Torque to 59Nm (44 lb.-ft.), (Figs. 13 & 14).

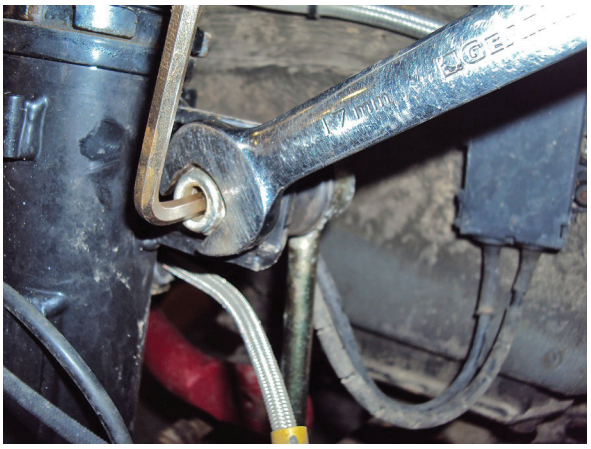

fig. 13

fig. 14

5. Reattach the ABS/pad wear wire and brake line to the strut at this time (Fig. 15).

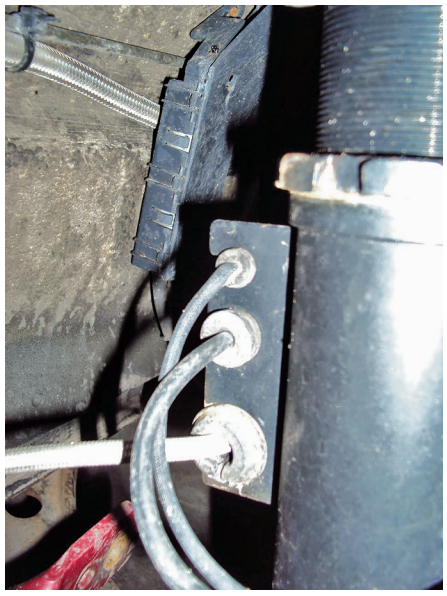

fig. 15

6. Route the air spring leader hose in a manner that will allow for full wheel/steering travel without pinching/binding or rubbing (Fig. 16).

fig. 16

7. Reinstall wheels. Torque the wheels to 107Nm (79 lb.-ft.).

ROUTING THE AIR LINES

1. Fully compress the suspension using a jack. With the suspension compressed, review the best routing for the leader hose that is clear of all suspension and steering components.
2. Routing should allow for the suspension to extend and steer without kinking, pulling the line tight or rubbing on other components. Following the brake line routing is often a good place to start. Check clearances to all other components.

Tips for Installing the Air Lines

CUTTING AIR LINES

When cutting air lines, use a sharp knife or a hose cutter and make clean, square cuts (Fig. 17). Do not use scissors or wire cutters because these tools will deform the air line, causing it to leak around fittings. Do not cut the lines at an angle.

The minimum bend radius for 1/4" air line is 1". The minimum bend radius for 3/8" air line is 1.5". Do not bend the air line less than the minimum bend radius or side load the fitting connections. Air lines are to be installed straight into fittings.

Inspect the air line for scratches that run lengthwise prior to installation. Contact Air Lift customer service at **(800) 248-0892** if the air line is damaged.

To watch a video demonstrating proper air line cutting, go to air-lift.co/cuttingairline

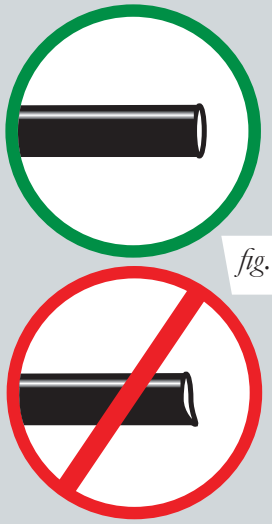

fig. 17

PUSH-TO-CONNECT (PTC) FITTINGS

Air lines should be pushed into the push-to-connect fittings firmly, with a slight side-to-side rotational twist. Check the connection by pulling on each line to verify a robust connection.

NOTE

To release the air line from the connection (Fig. 18), first release all air from the system. Push in on the air line (step 1), push the collar in (step 2), and with the collar depressed, pull the air line out of the fitting (step 3).

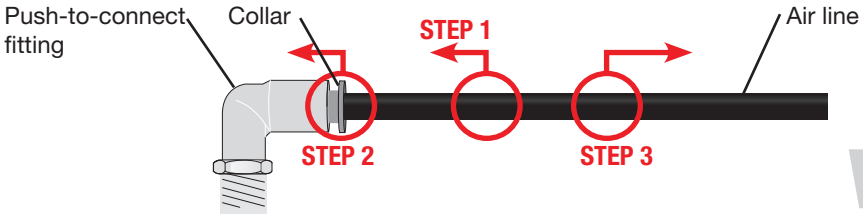

fig. 18

CHECKING FOR LEAKS

1. Inflate the air spring to 75-90 PSI.
2. Spray all connections with a solution of 1/5 liquid dish soap and 4/5 water. Spot leaks easily by looking for bubbles in the soapy water.
3. After the test, deflate the springs to the minimum pressure required to restore the system to normal ride height.
4. Check the air pressure again after 24 hours. A 2-4 PSI loss after initial installation is normal. Retest for leaks if the loss is more than 5 PSI.

FIXING LEAKS

1. If there is a problem with the push-to-connect fitting, remove the air line as described above. Trim 1” off the end of the air line. Be sure the cut is clean and square (see Fig. 17).
2. Reinsert the air line into the push-to-connect fitting as described above.

Before Operating

SETTING THE RIDE HEIGHT

1. With the suspension fully compressed, take a measurement from the fender to a chosen reference point – typically the center of the axle. Record this measurement as max compression (MC).
2. Cycle the suspension to max extension (ME) and record the measurement from the fender to the same reference point.
3. Add ME and MC, then divide the total by 2. Set the suspension to this point. This position will give 50% stroke in either direction and is a starting point for ride height (Fig. 19).

Formula for Calculating Ride Height
(ME+MC)÷2=MID STROKE

fig. 19

4. With the suspension at this position, loosen, then re-torque all suspension bushing pivot joint fasteners to the manufacturer's specifications (Table 1):

Torque Specifications		
Location	Nm	Lb.-ft.
Camber/caster plate to chassis	24	18
Strut to steering knuckle	107	79
Stabilizer link to strut	59	44
Stabilizer link to stabilizer bar	59	44
Wheels	107	79

Table 1

Suggested Driving Air Pressure	Maximum Air Pressure
35-45 PSI	**125 PSI**
FAILURE TO MAINTAIN ADEQUATE MINIMUM PRESSURE (OR PRESSURE PROPORTIONAL TO LOAD) MAY RESULT IN EXCESSIVE BOTTOMING OUT AND **WILL VOID THE WARRANTY**.	

Table 2

CHECK FOR BINDING

1. Inflate and deflate the system (do not exceed 125 PSI) to check for clearance or binding issues. With the air springs deflated, check clearances on everything so as not to pinch brake lines, vent tubes, etc. Clear lines if necessary.
2. Inflate the air springs to 75-90 PSI and check all connections for leaks.

⚠ CAUTION MAKE SURE THE FRONT WHEELS ARE STRAIGHT WHEN DEFLATING AND REINFLATING AIR BAGS.

DAMPING ADJUSTMENT

Suspension damping is a matter of compromise. Setting it too stiff will make the ride feel jarring. In addition, if the suspension is too stiff, the tires will lose contact with the road, reducing control and power delivery. On the other hand, if the suspension is too soft, the car can experience brake dive and excessive bouncing. The sweet spot lies somewhere in the middle. Air Lift dampers have a range of adjustment, which allows the driver to tune the ride and handling to his or her preferences.

Air Lift recommends damper and air pressure settings for every vehicle kit, but it is impossible to consider every situation. For example, even though Air Lift kits replace the dampers and springs, vehicles with sport-tuned suspensions might have stiffer bushings, larger anti-roll bars, bigger wheels, wider tires, etc. These settings may need to be adjusted to different vehicles and driving characteristics.

1. The dampers in this kit have 30 settings, or “clicks,” of adjustable compression and rebound damping characteristics. Damping is changed through the damper rod using the supplied adjuster (Figs. 20 & 21) or an 3mm hex key (not included).
2. Turn the adjuster clockwise (H) and the damping settings are hardened, reducing oscillations and body motion. Turn the adjuster counterclockwise (S) and the damping is softened.
3. Each damper in this kit is preset to “-20 clicks.” This means that the damper is adjusted 20 clicks away from full stiff, which starts at 0. Counting up from full stiff is the preferred method of keeping track of, or setting, damping. This setting was developed on a 1993 BMW 325is.

fig. 20

fig. 21

ALIGNING THE VEHICLE

1. Set the vehicle to the height at which it will most often be driven.
2. If the ride height is lower than stock, Air Lift Performance recommends loosening all pivot points (bolts, nuts) on any control arm, strut arm or radius rod that contains bushings. Once they have been loosened, re-torque to stock specifications (Table 1).

NOTE *It may be necessary to cycle the suspension to loosen the bushing from its mount. This will help re-orient the bushing at its new position based on the chosen ride height.*

3. Get a shop alignment of the vehicle at the new chosen ride height.

ADJUSTING EXTENDED OR DROP HEIGHT USING LOWER MOUNT

These dampers have been pre-set at the factory to provide maximum drop height while maintaining adequate tire clearance to the air spring. If you wish to gain more extended height (lift), which is the same as reducing drop height, or want to lower the chassis further and there is still adjustment available at the lower mount, please use the following procedure:

1. Support the vehicle with jack stands or a hoist at approved lifting points.
2. Remove the wheel.
3. Using the supplied spanner wrench, loosen the locking collar (Fig. 22).
4. Deflate the air spring to 0 PSI on the corner you are adjusting.
5. Disconnect lower mount from suspension.
6. Spin the lower mount to the desired location.

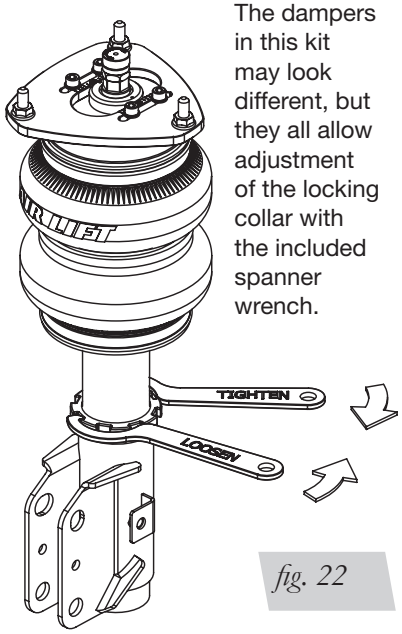

The dampers in this kit may look different, but they all allow adjustment of the locking collar with the included spanner wrench.

fig. 22

NOTE

Not all vehicles will have further drop height available.

7. Re-install lower mount to suspension and torque fasteners.
8. Tighten the lower locking collar to the lower mount using significant force.

⚠ CAUTION

WHEN ADJUSTING HEIGHT UPWARD, MAKE SURE THAT THE DAMPER BODY ENGAGES ALL THE THREADS OF THE LOWER MOUNT (FIG. 23). WHEN ADJUSTING DOWNWARD, MAKE SURE THERE IS ADEQUATE AIR SPRING CLEARANCE TO THE TIRE/WHEEL ASSEMBLY. CLEARANCE MUST BE CHECKED WITH SYSTEM FULLY DEFLATED AS WELL AS FULLY INFLATED TO ENSURE THAT NO RUBBING OCCURS. FAILURE TO MAINTAIN ADEQUATE CLEARANCE CAN RESULT IN AIR SPRING FAILURE AND WILL NOT BE COVERED UNDER WARRANTY.

⚠ CAUTION

DO NOT ADJUST HEIGHT BY SPINNING AIR SPRING ON DAMPER! DOING SO MAY CAUSE AN AIR LEAK AND COMPROMISE THE ASSEMBLY.

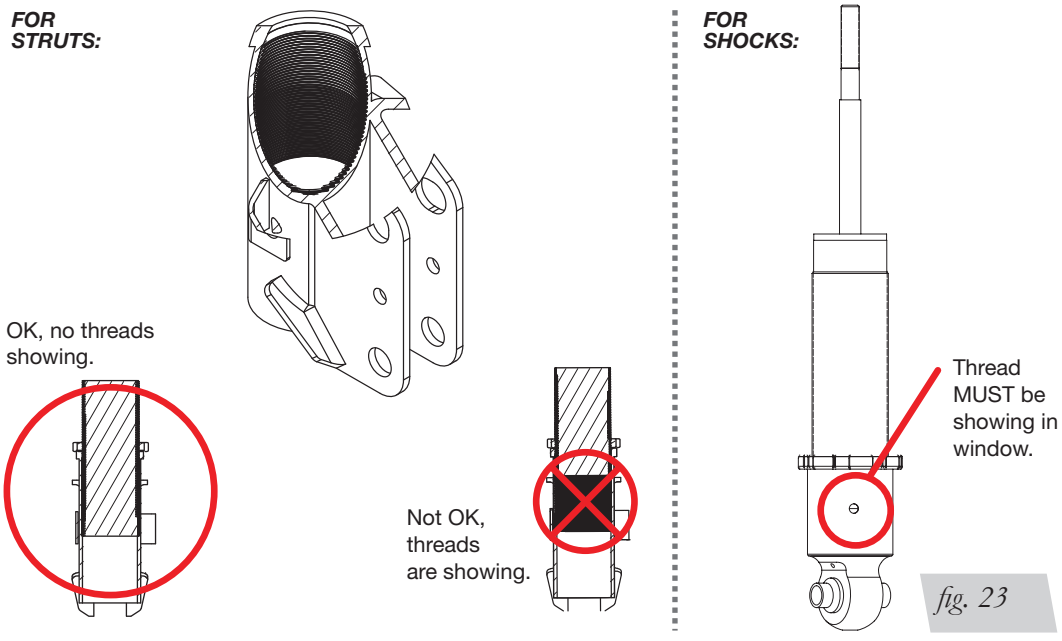

fig. 23

INSTALLATION CHECKLIST

☐ **Clearance** — Inflate the air springs to 75-90 PSI and make sure there is at least 1/2" clearance from anything that might rub against the air spring. This should be checked with the air spring fully inflated and fully deflated.

☐ **Leak** — Inflate the air springs to 75-90 PSI and check all connections for leaks. All leaks must be eliminated before the vehicle is road tested.

☐ **Heat** — Be sure there is sufficient clearance from heat sources, at least 6" for air springs and air lines. If a heat shield was included in the kit, install it. If there is no heat shield, but one is required, call Air Lift customer service at **(800) 248-0892**.

☐ **Fastener** — Recheck all bolts for proper torque.

☐ **Road** — Inflate the springs to recommended driving pressures. Drive the vehicle 10 miles and recheck for clearance, loose fasteners and air leaks.

☐ **Operating instructions** — If professionally installed, the installer should review the operating instructions with the owner. Be sure to provide the owner with all paperwork that came with the kit.

POST-INSTALLATION CHECKLIST

☐ **Overnight leak down test** — Recheck air pressure 24 hours after installation and driving of the vehicle. If the pressure has dropped more than 5 PSI, there is a leak that must be fixed.

☐ **Air pressure requirements** — It is important to understand the air pressure requirements of the air spring system. Regardless of load, the air pressure should always be adjusted to maintain adequate ride height at all times while driving.

☐ **Thirty-day or 500-mile test** —Recheck the air spring system after 30 days or 500 miles, whichever comes first. If any part shows signs of rubbing or abrasion, the source should be identified and moved, if possible. If it is not possible to relocate the cause of the abrasion, the air spring may need to be remounted. If professionally installed, the installer should be consulted. Check all fasteners for tightness.

Use, Maintenance and Servicing

1. An Air Lift air management system is strongly recommended for this product, but it is possible to operate without one. The air lines can be routed to Schrader valves for use with a separate air compressor. Air lines and Schrader valves are not included with Air Lift Performance kits and would need to be purchased separately. To learn more about Air Lift air management systems visit **air-lift.co/productlines**.
2. Check the air pressure before driving.

⚠ WARNING

BEFORE SERVICING THE VEHICLE, MAKE SURE TO TURN OFF "RISE ON START" AND "PRESET MAINTAIN." THIS WILL ELIMINATE ANY UNINTENDED SUSPENSION CYCLING IF YOU NEED TO TURN THE KEY ON IN THE VEHICLE FOR ANY REASON.

TUNING THE AIR PRESSURE

Pressure determination comes down to three things — level vehicle, ride comfort and stability.

1. **Level vehicle**
   Depending on load, it is possible one side will need more pressure than the other to level the vehicle.
2. **Ride comfort**
   If the vehicle has a harsh ride, it may be due to either too much pressure or not enough causing frequent bottoming out. Also, riding the vehicle at the top, or close to the top of the available stroke will cause an uncomfortable ride due to a lack of rebound travel. This situation should be avoided for driving any significant distance. Try different pressures to determine the best ride comfort. See the Air Lift suggested driving air pressure for this vehicle (Table 2).
3. **Stability**
   Stability translates into safety and should be the priority, meaning the driver may need to sacrifice a perfectly level and comfortable ride. Stability issues include roll control, bounce, dive during braking and sponginess. Tuning out these problems usually requires additional air pressure, damping or both.

TROUBLESHOOTING GUIDE

PROBLEM	CAUSE	SOLUTION
Air spring won't maintain pressure.	Leak at fitting, air line not cut properly or damage to air line during installation.	Find location of leak by spraying listed components with soapy water solution and look for bubbles. Tighten air fitting, re-cut air line or replace damaged components.
	Leak at lower O-ring on damper if air spring is over the damper.	Spray bottom of air spring with soapy water solution and look for bubbles. Contact Air Lift customer service at **(800) 248-0892** to determine if component should be replaced.
Knocking noise when hitting bumps.	Loose suspension component such as locking collar on damper.	Tighten lower locking collar with significant force, check and tighten suspension components to factory specs at desired ride height.
	Driving vehicle too close to maximum extension.	Check current ride height and compare to maximum height. If there is less than 1" (25mm) difference, reduce air pressure to lower ride height.
		Lengthen strut or shock to increase available up travel.
Suspension bottoms out.	Air pressure is too low, causing air springs to bottom out.	Raise air pressure.
The ride is too bouncy.	Air pressure is too high, causing air springs to be too stiff.	Lower air pressure and adjust damper length if necessary to achieve proper ride height.
	Damping is inadequate.	Increase damping with adjusters.
The ride is too soft or floaty.	Damping is inadequate.	
The ride is too harsh.	Excessive damping.	Reduce damping with adjusters.

Notes

Notes

Limited Warranty and Return Policy

Air Lift Company provides a 1-year limited warranty to the original purchaser of Air Lift Performance damper kits from the date of original purchase, that the products will be free from defects in workmanship and materials when used on vehicles as specified by Air Lift Company and under normal operating conditions, subject to the requirements and exclusions set forth in the full Limited Warranty and Return Policy that is available online at **www.airliftperformance.com/warranty**.

For additional warranty information contact Air Lift Company customer service.

Replacement Part Information

If replacement parts are needed, call Air Lift customer service. Most parts are immediately available and can be shipped the same day.

Contact Air Lift Company customer service at (800) 248-0892 first if:

- Parts are missing from the kit.
- Need technical assistance on installation or operation.
- Broken or defective parts in the kit.
- Wrong parts in the kit.
- Have a warranty claim or question.

Contact the retailer where the kit was purchased:

- If it is necessary to return or exchange the kit for any reason.
- If there is a problem with shipping if shipped from the retailer.
- If there is a problem with the price.

Contact Information

Mailing address	P.O. Box 80167 Lansing, MI 48908-0167
Shipping address for returns	2727 Snow Road Lansing, MI 48917
Phone	Toll free: (800) 248-0892 International: (517) 322-2144
Email	service@airliftcompany.com
Web address	www.airliftcompany.com

Air Lift Company reserves the right to make changes and improvements to its products and publications at any time. For the latest version of this manual, contact Air Lift Company at **(800) 248-0892** or visit **www.airliftperformance.com**.

Need Help?

Contact Air Lift Company customer service department by calling (800) 248-0892. For calls from outside the USA or Canada, dial (517) 322-2144.

CONNECT BY SEARCHING FOR **AIR LIFT PERFORMANCE** *#LIFEONAIR*

Thank you for purchasing Air Lift Performance products!

Air Lift Performance • 2727 Snow Road • Lansing, MI 48917 or P.O. Box 80167 • Lansing, MI 48908-0167
Toll Free (800) 248-0892 • Local (517) 322-2144 • Fax (517) 322-0240 • www.airliftperformance.com

Printed in the USA
JJC-1116

Kits 75673 & 78615

BMW E30 and
E36/5/7/8 Compact

Rear Application

INSTALLATION GUIDE

IMPORTANT: KIT 78615 DOES NOT COME WITH REAR SHOCKS.

For maximum effectiveness and safety, please read these instructions completely before proceeding with installation.

Failure to read these instructions can result in an incorrect installation.

MN-889 • (021509) • ECR 8326

TABLE OF CONTENTS

Introduction 2
Notation Explanation 2
Important Safety Notices 2

Installation Diagram 3
Hardware List 3

Installing the Air Suspension 4
Preparing the Vehicle 4
Removing the Rear Suspension 4
Preparing the Vehicle Chassis 5
Air Suspension Installation 7
Damping Adjustment 10
Aligning the Vehicle 10
Adjusting Extended or Drop Height Using Lower Mount 11

Before Operating 13
Installation Checklist 13

Product Use, Maintenance and Servicing 14
Suggested Driving and Maximum Air Pressures 14
Maintenance Guidelines 14
Troubleshooting Guide 14
Frequently Asked Questions 14
Tuning the Air Pressure 15
Checking for Leaks 15
Fixing Leaks 15

Limited Warranty and Return Policy 16

Replacement Information 17

Contact Information 17

Drilling Template Verification 18

Template 19

Introduction

The purpose of this publication is to assist with the installation, maintenance and troubleshooting of this BMW E30 Performance kit.

It is important to read and understand the entire installation guide before beginning installation or performing any maintenance, service or repair. The information includes a hardware list, step-by-step installation information, maintenance tips, safety information and a troubleshooting guide.

Air Lift Performance reserves the right to make changes and improvements to its products and publications at any time. For the latest version of this manual, contact Air Lift Performance at (800) 248-0892 or visit our website at www.airliftperformance.com.

NOTATION EXPLANATION

Hazard notations appear in various locations in this publication. Information which is highlighted by one of these notations must be observed to help minimize risk of personal injury or possible improper installation which may render the vehicle unsafe. Notes are used to help emphasize areas of procedural importance and provide helpful suggestions. The following definitions explain the use of these notations as they appear throughout this guide.

⚠ DANGER INDICATES IMMEDIATE HAZARDS WHICH WILL RESULT IN SEVERE PERSONAL INJURY OR DEATH.

⚠ WARNING INDICATES HAZARDS OR UNSAFE PRACTICES WHICH COULD RESULT IN SEVERE PERSONAL INJURY OR DEATH.

⚠ CAUTION INDICATES HAZARDS OR UNSAFE PRACTICES WHICH COULD RESULT IN DAMAGE TO THE MACHINE OR MINOR PERSONAL INJURY.

NOTE *Indicates a procedure, practice or hint which is important to highlight.*

IMPORTANT SAFETY NOTICES

The installation of this kit does not alter the Gross Vehicle Weight Rating (GVWR) or payload of the vehicle. Check your vehicle's owner's manual and do not exceed the maximum load listed for your vehicle.

Gross Vehicle Weight Rating: The maximum allowable weight of the fully loaded vehicle (including passengers and cargo). This number — along with other weight limits, as well as tire, rim size and inflation pressure data — is shown on the vehicle's Safety Compliance Certification Label.

Payload: The combined, maximum allowable weight of cargo and passengers that the vehicle is designed to carry. Payload is GVWR minus the Base Curb Weight.

⚠ WARNING DO NOT INFLATE AIR SPRINGS WHILE OFF OF THE VEHICLE. DAMAGE TO ASSEMBLY MAY RESULT AND VOID WARRANTY.

⚠ CAUTION DO NOT WELD TO, OR MODIFY PERFORMANCE STRUTS/SHOCKS IN ANY WAY. DAMAGE TO UNIT MAY OCCUR AND WILL VOID WARRANTY.

Installation Diagram

HARDWARE LIST

Item	Part #	Description	Qty
A	58536	Air Spring	2
B	11802	Roll Plate	2
C	20997	Leader Hose, 1/4” ID	2
D	21810	Union, 1/4”FNPT X 1/4” PTC, DOT	2
E	21987	Union, 1/4”FNPT X 3/8” PTC, DOT	2
F	26720	Shock, BMW E30 Rear	2
G		Flexible Adjuster Extension	2
H		Spanner Wrench	1

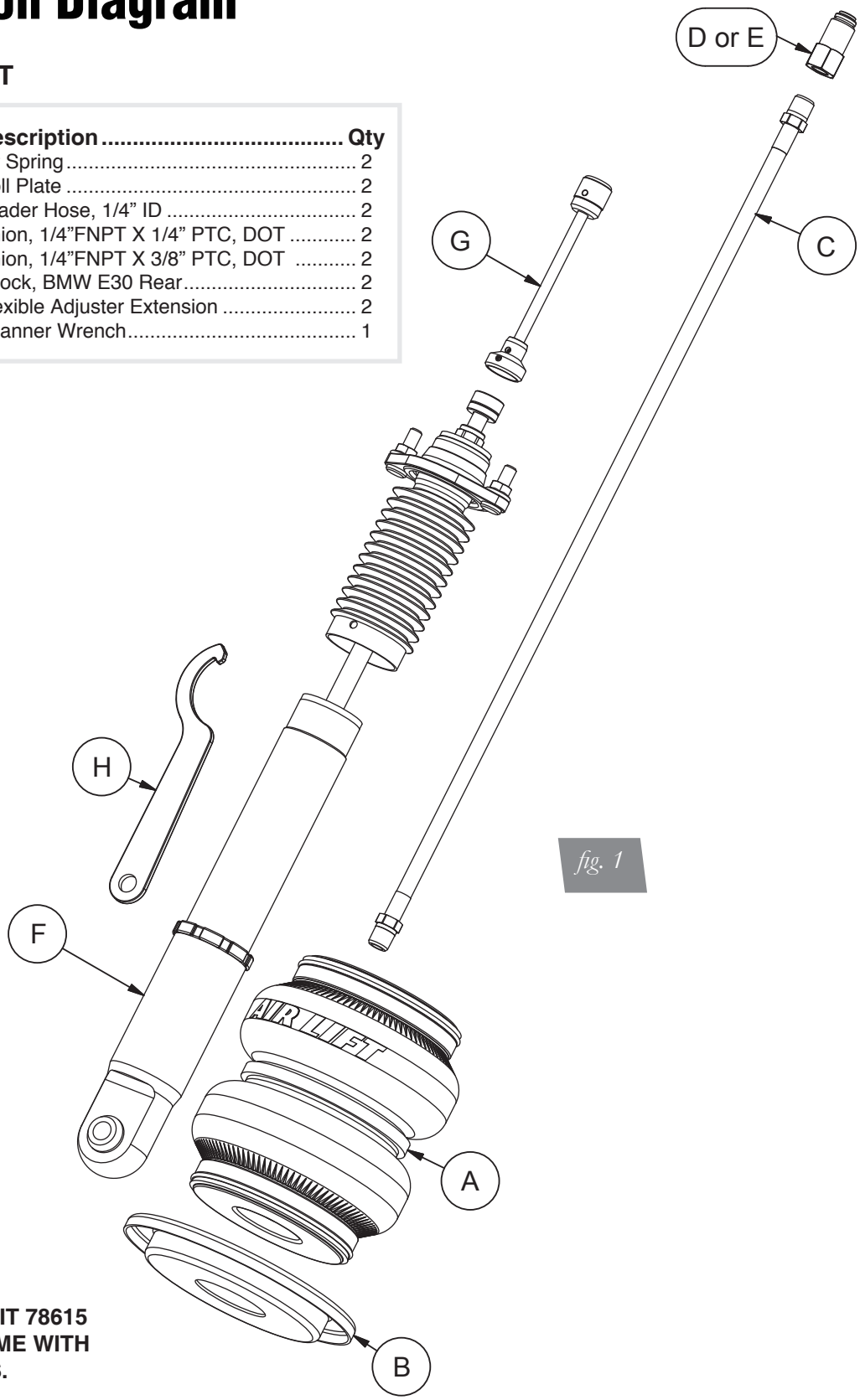

fig. 1

IMPORTANT: KIT 78615 DOES NOT COME WITH REAR SHOCKS.

STOP! Missing or damaged parts? Call Air Lift customer service at (800) 248-0892 for a replacement part.

Installing the Air Suspension

PREPARING THE VEHICLE

1. Elevate and support the vehicle with a hoist or jack stands.
2. Remove the rear wheel and support the hub assembly (fig. 2).

fig. 2

REMOVING THE REAR SUSPENSION

⚠ CAUTION COIL SPRING UNDER LOAD!

1. With the hub supported, unbolt the shock eye from the hub assembly (fig. 3). Slowly lower the hub to release the load on the coil spring (fig. 4). Remove the coil spring and spring pads from the vehicle (fig. 5).

⚠ CAUTION IF THE LOWER CONTROL ARM IS ALLOWED TO HANG FREE, THE AXLE SHAFT CONSTANT VELOCITY JOINTS WILL BE DAMAGED!

fig. 3

fig. 4

fig. 5

2. Unbolt the shock upper mount and remove the shock assembly from the vehicle (fig. 6). If rear shocks are not being replaced, move to next step.

fig. 6

PREPARING THE VEHICLE CHASSIS

1. Place the supplied template (on page 17) over the upper coil spring bump (fig. 7). The small circle centerline will designate the location where you want the air line to exit through the upper spring seat. Position as desired, center punch and drill through the upper spring seat. A .67” diameter (17mm) hole will be required to pass the air line through (fig. 8).

fig. 7

fig. 8

2. Measure from the flats of the upper and lower spring seats 24mm to the end of the spring seat bump and mark this position (fig. 11). This should be near the end of the bump. Trim the bump material away at this line. When finished, the spring bump is to be no longer than 24mm (figs. 12, 13 and 14).

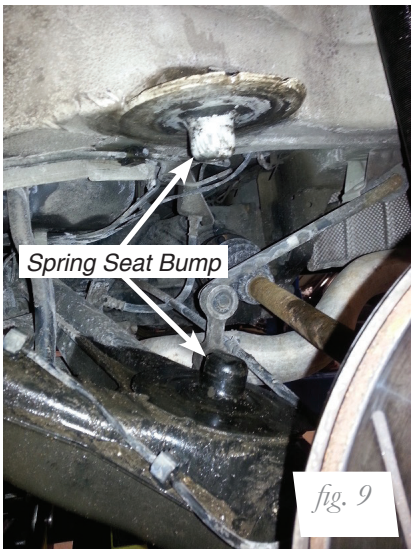

fig. 9

fig. 10

fig. 11

fig. 12

fig. 13

fig. 14

AIR SUSPENSION INSTALLATION

1. Apply thread sealant to the threads of the air line and thread into the air spring 1 3/4 turns beyond hand tight.
2. Place the roll plate over the lower spring bump (fig. 15).

fig. 15

3. Route the air line through the previously cut hole (fig. 16). Install the leader line in the air spring port 1 3/4 turns past hand tight. Nest the air spring around the upper and lower spring seats (fig. 17).

fig. 16

fig. 17

4. Install the shock assembly (fig. 18). Torque the upper mount bolts to 22Nm (16lb-ft). Install, but do not torque the lower shock eye bolt at this time (fig. 19).

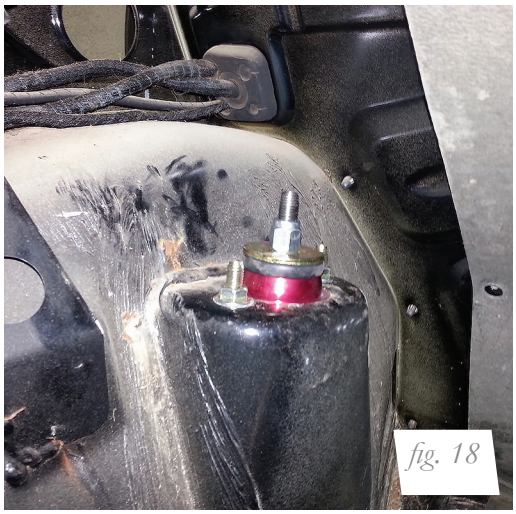
fig. 18

fig. 19

fig. 20

5. Apply thread sealant to the threads of the leader hose and thread the desired fitting (D or E) onto the hose 1 3/4 turns beyond hand tight (fig. 21).

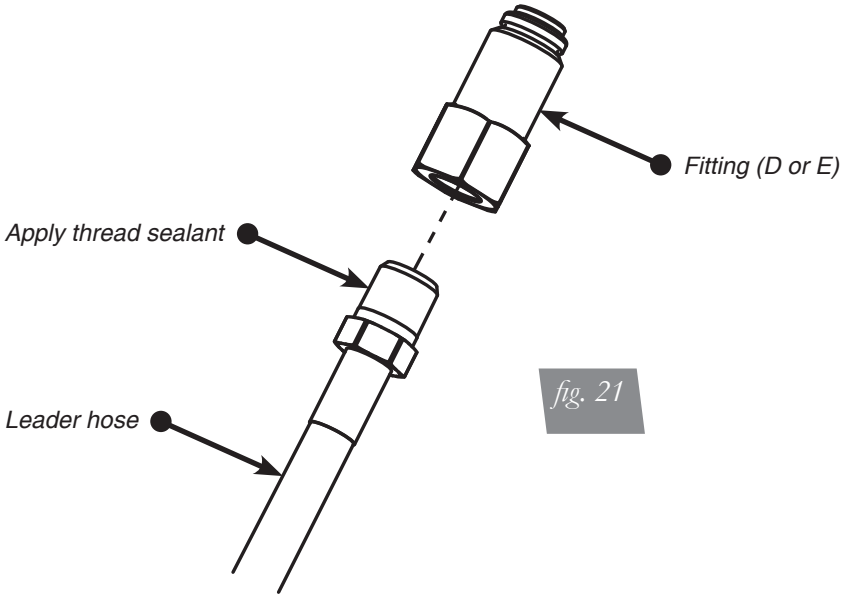

fig. 21

6. Fully compress the suspension using a jack. With the suspension compressed, review the best routing for the leader hose that is clear of all suspension components and axle. Routing should also allow for the suspension to extend without kinking or pulling the line tight or rubbing on other components. Check clearances to all other components.
7. With the suspension fully compressed, take a measurement from the fender to some reference point – typically the center of the axle. Record this measurement as Max Compression.
8. Cycle the suspension to Max Extension and record the measurement from the same reference points.
9. Add ME and MC then divide by 2. Set the suspension to this point. This position will give 50% stroke in either direction and is a starting point for ride height (fig. 22).

Formula for Calculating Ride Height
(ME+MC)÷2=MID STROKE

fig. 22

10. With the suspension at this position, loosen, then re-torque the lower control arm bolts to manufacturer's specifications (Table 1).

Torque Specifications		
Location	Nm	lb-ft
Shock eye bolt	72-87	52-63
Shock upper mount nuts	22-24	16-17
Wheels	120 +/-10	89 +/-1
Air line and fitting threads	1 and 3/4 turns beyond hand tight	

Table 1

DAMPING ADJUSTMENT

The struts in this kit have 30 settings, or “clicks”, of adjustable compression and rebound damping characteristics. Damping is changed through the strut rod using the supplied adjuster (figs. 23 & 24) or a 3mm allen wrench.

Turn the adjuster clockwise and the damping settings are hardened. Turn the adjuster counterclockwise and the damping is softened.

Each shock is preset to “-16 clicks”. This means that the shock is adjusted 16 clicks away from full stiff. Counting down from full stiff is the preferred method of keeping track of, or setting, damping. This setting was developed on a 1986 BMW 325ES and may need to be adjusted to different vehicles and driving characteristics.

fig. 23

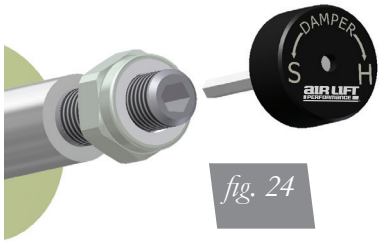

fig. 24

ALIGNING THE VEHICLE

1. Using the control system, set the vehicle height to the new custom ride height.
2. If the custom ride height is lower than stock, we recommend loosening all pivot points (bolts, nuts) on any control arm, strut arm or radius rod that contains bushings. Once they have been loosened, re-torque to stock specifications.

NOTE

It may be necessary to cycle the suspension to loosen the bushing up from its mount. This will help re-orient the bushing at its new position and increase life of the bushings based on the custom ride height.

ADJUSTING EXTENDED OR DROP HEIGHT USING LOWER MOUNT

Your struts have been pre-set at the factory to provide maximum drop height while maintaining adequate tire clearance to the air spring. If you wish to gain more extended height (lift), which is the same as reducing drop height, or want to lower the chassis further and there is still adjustment available at the lower mount, please use the following procedure:

1. Support the vehicle with jack stands or a hoist at approved lifting points.
2. Remove the wheel.
3. Using the supplied spanner wrench, loosen the lower locking collar (fig. 25).

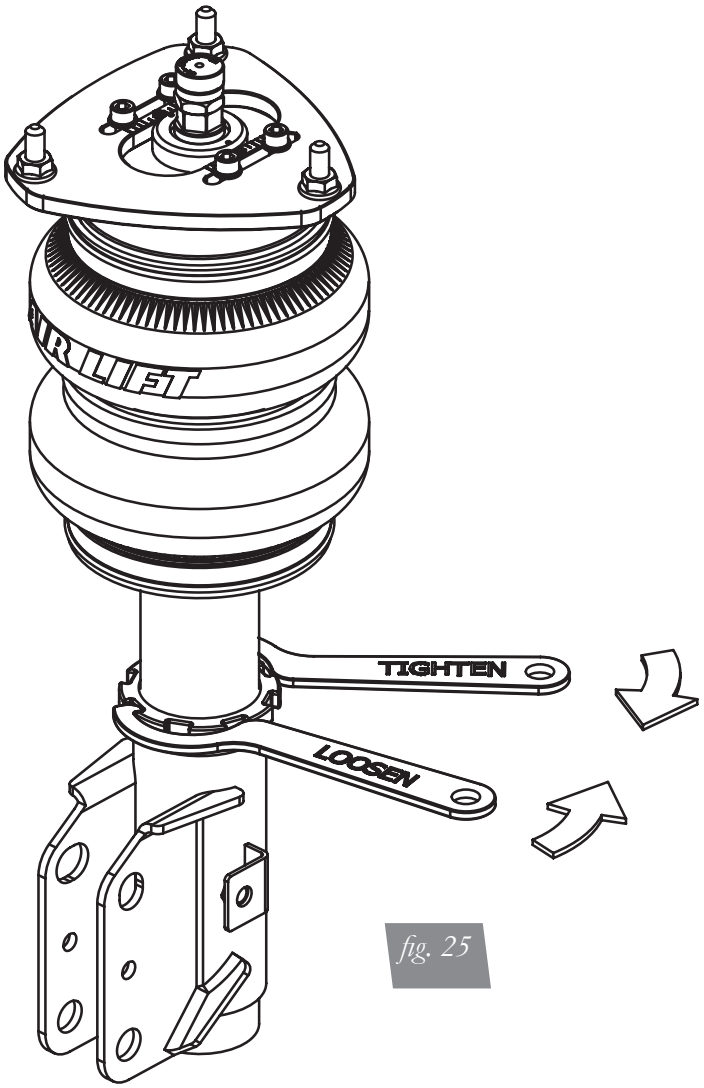

fig. 25

4. Deflate the air spring to 0 PSI on the corner you are adjusting.
5. Disconnect lower mount from suspension.
6. Spin the lower mount to the desired location.

NOTE *Not all models will have further drop height available.*

7. Re-install lower mount to suspension and torque fasteners.
8. Tighten the lower locking collar to the lower mount using significant force.

⚠ CAUTION WHEN ADJUSTING HEIGHT UPWARDS, MAKE SURE THAT THE STRUT BODY ENGAGES ALL THE THREADS OF THE LOWER MOUNT (FIG. 26). WHEN ADJUSTING DOWNWARDS, MAKE SURE THERE IS ADEQUATE AIR SPRING CLEARANCE TO THE TIRE/WHEEL ASSEMBLY. CLEARANCE MUST BE CHECKED WITH SYSTEM FULLY DEFLATED AS WELL AS FULLY INFLATED TO ENSURE THAT NO RUBBING OCCURS. FAILURE TO MAINTAIN ADEQUATE CLEARANCE CAN RESULT IN AIR SPRING FAILURE AND WILL NOT BE COVERED UNDER WARRANTY.

⚠ CAUTION DO NOT ADJUST HEIGHT BY SPINNING AIR SPRING ON STRUT! DOING SO MAY CAUSE AN AIR LEAK AND COMPROMISE THE ASSEMBLY.

FOR STRUTS:

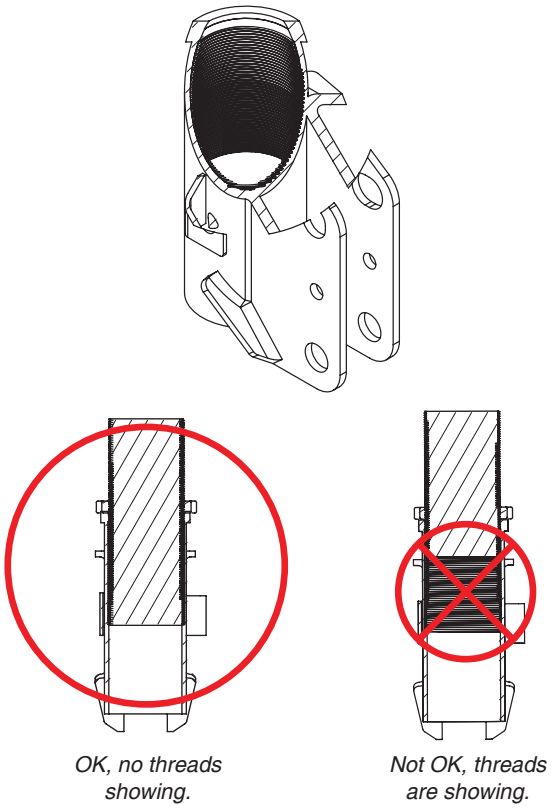

OK, no threads showing.

Not OK, threads are showing.

FOR SHOCKS:

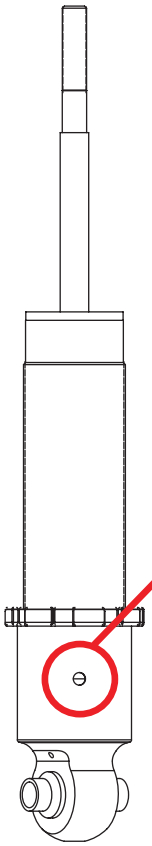

fig. 26

Before Operating

⚠ CAUTION MAKE SURE THE FRONT WHEELS ARE STRAIGHT WHEN DEFLATING AND REINFLATING AIR BAGS.

1. Inflate and deflate the system (do not exceed 125 PSI) to check for clearance or binding issues. With the air springs deflated, check clearances on everything so as not to pinch brake lines, vent tubes, etc. Clear lines if necessary.
2. Inflate the air springs to 75-90 PSI and check all connections for leaks.
3. An Air Lift Air Management System such as 3H/3P is highly recommended for this product.
4. Please familiarize yourself further with this product by reading the Product Use, Maintenance and Servicing section.

INSTALLATION CHECKLIST

- ❑ Clearance test — Inflate the air springs to 75-90 PSI and make sure there is at least 1/2" clearance from anything that might rub against each sleeve. Be sure to check the tire, brake drum, frame, shock absorbers and brake cables.
- ❑ Leak test before road test — Inflate the air springs to 75-90 PSI and check all connections for leaks. All leaks must be eliminated before the vehicle is road tested.
- ❑ Heat test — Be sure there is sufficient clearance from heat sources, at least 6" for air springs and air lines. If a heat shield was included in the kit, install it. If there is no heat shield, but one is required, call Air Lift customer service at (800) 248-0892.
- ❑ Fastener test — Recheck all bolts for proper torque.
- ❑ Road test — The vehicle should be road tested after the preceding tests. Inflate the springs to recommended driving pressures. Drive the vehicle 10 miles and recheck for clearance, loose fasteners and air leaks.
- ❑ Operating instructions — If professionally installed, the installer should review the operating instructions with the owner. Be sure to provide the owner with all of the paperwork that came with the kit.

Technician's Signature _____

Date _____

POST-INSTALLATION CHECKLIST

- ❑ Overnight leak down test — Recheck air pressure after the vehicle has been used for 24 hours. If the pressure has dropped more than 5 PSI, then there is a leak that must be fixed. Either fix the leak yourself or return to the installer for service.
- ❑ Air pressure requirements — Regardless of load, the air pressure should always be adjusted to maintain adequate ride height at all times while driving.
- ❑ Thirty day or 500 mile test — Recheck the air spring system after 30 days or 500 miles, whichever comes first. If any part shows signs of rubbing or abrasion, the source should be identified and moved, if possible. If it is not possible to relocate the cause of the abrasion, the air spring may need to be remounted. If professionally installed, the installer should be consulted. Check all fasteners for tightness.

Product Use, Maintenance and Servicing

Suggested Driving Air Pressure	Maximum Air Pressure
40 PSI	125 PSI
FAILURE TO MAINTAIN ADEQUATE MINIMUM PRESSURE (OR PRESSURE PROPORTIONAL TO LOAD) WILL RESULT IN BOTTOMING OUT, OVER-EXTENSION OR RUBBING AGAINST ANOTHER COMPONENT AND WILL **VOID THE WARRANTY**.	

MAINTENANCE GUIDELINES

NOTE *By following these steps, vehicle owners will obtain the longest life and best results from their air spring.*

1. Check the air pressure before driving.
2. Never inflate beyond 125 PSI.
3. If you develop an air leak in the system, use a soapy water solution to check all air line connections, before deflating and removing the spring.
4. When increasing load, always adjust the air pressure to maintain normal ride height. Increase or decrease pressure from the system as necessary to attain normal ride height for optimal ride and handling. Remember that loads carried behind the axle (including tongue loads) require more leveling force (pressure) than those carried directly over the axle.

⚠ CAUTION FOR YOUR SAFETY AND TO PREVENT DAMAGE TO YOUR VEHICLE, DO NOT EXCEED MAXIMUM GROSS VEHICLE WEIGHT RATING (GVWR), AS INDICATED BY THE VEHICLE MANUFACTURER. ALTHOUGH YOUR AIR SPRINGS ARE RATED AT A MAXIMUM INFLATION PRESSURE OF 125 PSI, THE AIR PRESSURE ACTUALLY NEEDED IS DEPENDENT ON YOUR LOAD.

5. Always add air to the springs in small quantities, checking the pressure frequently. Sleeves require less air volume than a tire and inflate quickly.
6. Should it become necessary to raise the vehicle by the frame, make sure the control system is turned off before lifting.

TROUBLESHOOTING GUIDE

1. Leak test the air line connections, the threaded connection into the air spring, and all fittings in the control system.
2. Inspect the air lines to be sure none are pinched. Tie straps may be too tight. Loosen or replace the strap and replace leaking components.
3. Inspect the air line for holes and cracks. Replace as needed.
4. Look for a kink or fold in the air line. Reroute as needed.

If the preceding steps do not solve the problem, it is possibly caused by a failed air spring — either a factory defect or an operating problem. Please call Air Lift at (800) 248-0892 for assistance.

FREQUENTLY ASKED QUESTIONS

Q. Will installing air springs increase the weight ratings of a vehicle?
No. Adding air springs will not change the weight ratings (GAWR, GCWR and/or GVWR) of a vehicle. Exceeding the GVWR is dangerous and voids the Air Lift warranty.

Q. How long should air springs last?
If the air springs are properly installed and maintained they can last indefinitely.

Q. Will raising the vehicle on a hoist for service work damage the air springs?
No. The vehicle can be lifted on a hoist safely. If equipped with a digital control system, it is recommended that the system be put in “manual mode” before lifting so the system does not try and adjust while on the hoist.

TUNING THE AIR PRESSURE

Pressure determination comes down to three things — level vehicle, ride comfort, and stability.

1. **Level vehicle**

   If the vehicle's headlights are shining into the trees or the vehicle is leaning to one side, then it is not level. Raise the air pressure to correct either of these problems and level the vehicle.

2. **Ride comfort**

   If the vehicle has a rough or harsh ride it may be due to either too much pressure or not enough. Try different pressures to determine the best ride comfort. See Air Lift suggested driving air pressure.

3. **Stability**

   Stability translates into safety and should be the priority, meaning the driver may need to sacrifice a perfectly level and comfortable ride. Stability issues include roll control, bounce, dive during braking and sponginess. Tuning out these problems usually requires additional air pressure, strut damping, or both.

CHECKING FOR LEAKS

1. Inflate the air spring to 80 PSI.
2. Spray all connections and the inflation valves with a solution of 1/5 liquid dish soap and 4/5 water. Spot leaks easily by looking for bubbles in the soapy water.
3. After the test, deflate the springs to the minimum pressure required to restore the system to normal ride height.
4. Check the air pressure again after 24 hours. A 2-4 PSI loss after initial installation is normal. Retest for leaks if the loss is more than 5 PSI.

FIXING LEAKS

1. If there is a problem with a swivel fitting:
   a. Check the air line connection by deflating the spring and removing the line by pulling the collar against the fitting and pulling firmly on the air line. Trim 1" off the end of the air line. Be sure the cut is clean and square (see Fig. 27). Reinsert the air line into the push-to-connect fitting.
   b. Check the threaded connection by tightening the swivel fitting another 1/2 turn. If it still leaks, deflate the air spring, remove the fitting, and re-coat the threads with thread sealant. Reinstall by hand tightening as much as possible and then use a wrench for an additional two turns.
2. If the preceding steps have not resolved the problem, call Air Lift customer service at (800) 248-0892.

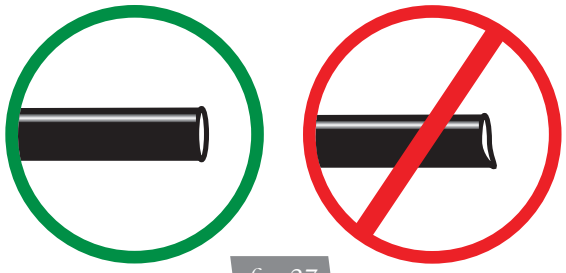

fig. 27

Limited Warranty and Return Policy

WHAT THIS WARRANTY COVERS

Air Lift Company provides a Limited Lifetime Warranty to the original purchaser of its Air Lift Performance 3H™ and 3P™ Control/Air Management Systems, that the Air Lift Performance products will be free from defects in workmanship and materials for the normal expected life of the part when used on cars and trucks as specified by Air Lift Company and under normal operating conditions, subject to the requirements and exclusions set forth below.

For all other Air Lift Performance products, Air Lift Company warrants to the original purchaser for a period of one year from the date of original purchase, that the Air Lift Performance products will be free from defects in workmanship and materials when used on cars and trucks as specified by Air Lift Company and under normal operating conditions, subject to the requirements and exclusions set forth below.

WHAT THIS WARRANTY DOES NOT COVER

The warranty does not apply to products that have been improperly applied, improperly installed or which have not been maintained in accordance with installation instructions furnished with all products. This warranty does not apply and is void if damage or failure is caused by: accident, abuse, misuse (including but not limited to racing or off-road activities or commercial use), abnormal use, faulty installation, liquid contact, fire, earthquake or other external cause; operating the product outside Air Lift Company's instructions, specifications or guidelines; or service, alteration, maintenance or repairs performed by anyone other than Air Lift Company to the product from its purchased condition. This warranty also does not apply to: Universal Air (Fabricator Kits), consumable parts, such as batteries; cosmetic damage, including but not limited to scratches or dents; defects caused by normal wear and tear or otherwise due to the normal aging of the product, or if any serial or identification number has been removed or defaced from the product. Air Lift Company reserves the right to change the design of any product without assuming any obligation to modify any product previously manufactured.

LIMITATION OF LIABILITY

To the extent permitted by law, this warranty and the remedies set forth herein are exclusive and in lieu of all other warranties, remedies and conditions, whether oral, written, statutory, express or implied. AIR LIFT COMPANY DISCLAIMS ALL STATUTORY AND IMPLIED WARRANTIES, INCLUDING WITHOUT LIMITATION, WARRANTIES OF MERCHANTABILITY AND FITNESS FOR A PARTICULAR PURPOSE AND WARRANTIES AGAINST HIDDEN OR LATENT DEFECTS TO THE EXTENT PERMITTED BY LAW. To the extent such warranties cannot be disclaimed, such implied warranties shall apply only for the warranty period specified above. Please note that some states do not allow limitation on how long an implied warranty (or condition) lasts. So the above limitation may not apply to you.

Except as provided in this warranty and to the extent permitted by law, Air Lift Company shall not be liable for any direct, special, incidental or consequential damages resulting from any breach of warranty or condition, or arising in connection with the sale, use or repair of Air Lift products, or under any other legal theory, including but not limited to loss of use, loss of revenue, loss of actual or anticipated profits, loss of the use of money, loss of business, loss of opportunity, loss of goodwill, and loss of reputation. Air Lift Company's maximum liability shall not in any case exceed the purchase price paid by you for the Air Lift product. Please note that some states do not allow the exclusion or limitation of incidental or consequential damages, so the above limitation or exclusion may not apply to you.

HOW TO GET SERVICE

If a defect in workmanship or materials causes your Air Lift Performance product to become inoperable within the warranty period, before returning any defective product, call Air Lift Company at (800) 248-0892 in the U.S. and Canada (elsewhere, (517) 322-2144) to obtain a Returned Materials Authorization (RMA) number. The consumer shall be responsible for removing (labor charges) the defective product from the vehicle and returning it, shipping costs prepaid, to Air Lift Company for verification. Returns to Air Lift Company must be postage prepaid and sent to: Air Lift Company • 2727 Snow Road • Lansing, MI • 48917. You must prove to the satisfaction of Air Lift Company the date of original purchase of your Air Lift Performance product. You must also enclose the RMA number and a return address. A minimum $10 shipping and handling charge will apply to all warranty claims. You must also pack the product to minimize the risk of it being damaged in transit. If we receive a product in damaged condition as the result of shipping, we will notify you and you must seek a claim with the shipper.

WHAT AIR LIFT COMPANY WILL DO

If you submit a valid claim to Air Lift Company during the warranty period, Air Lift Company will, at its option, repair your Air Lift Performance product or furnish you with a new or rebuilt product. Air Lift Company will not reimburse you for repairs or replacement parts provided by other parties. Your repaired or replacement Air Lift Performance product will be returned to you (subject to payment of the required warranty claim shipping and handling charge) and it will be covered under the warranty for the balance of the warranty period, if any. When a product or part is replaced, any replacement item becomes your property and the replaced item becomes property of Air Lift Company. You are responsible for installation/reinstallation (labor charges) of the product.

HOW THE LAW RELATES TO THIS WARRANTY

This warranty gives you specific legal rights and you may also have other rights which vary from state to state. By this warranty, Air Lift Company does not limit or exclude your rights except as allowed by law. To fully understand your rights, you should consult the laws of your state.

Replacement Information

If you need replacement parts, contact the local dealer or call Air Lift customer service at (800) 248-0892. Most parts are immediately available and can be shipped the same day.

Contact Air Lift Performance customer service at (800) 248-0892 first if:

- Parts are missing from the kit.
- Need technical assistance on installation or operation.
- Broken or defective parts in the kit.
- Wrong parts in the kit.
- Have a warranty claim or question.

Contact the retailer where the kit was purchased:

- If it is necessary to return or exchange the kit for any reason.
- If there is a problem with shipping if shipped from the retailer.
- If there is a problem with the price.

Contact Information

If you have any questions, comments or need technical assistance contact our customer service department by calling (800) 248-0892. For calls from outside the USA or Canada, our local number is (517) 322-2144. You may also contact customer service anytime by e-mail at techsupport@airliftperformance.com.

For inquiries by mail, our address is PO Box 80167, Lansing, MI 48908-0167. Our shipping address for returns is 2727 Snow Road, Lansing, MI 48917.

You may also contact our sales team anytime by e-mail at sales@airliftperformance.com or on the web at www.airliftperformance.com.

Drilling Template Verification

⚠ CAUTION

IMPORTANT: PRINT THIS MANUAL AT 100% SCALE. THIS MANUAL MAY CONTAIN A DRILLING TEMPLATE, WHICH WOULD BE RENDERED INCORRECT IN DIMENSION IF PRINTED WITH ANY SCALING. USING AN INCORRECT TEMPLATE TO DRILL HOLES MAY CAUSE DAMAGE TO YOUR VEHICLE!

PLEASE REFER TO THE ONE-INCH SCALE (FIG. 28) AND USE A MEASURING TOOL TO CONFIRM THAT THE PRINTED SCALE MEASURES ONE-INCH TO VERIFY THAT YOU HAVE PRINTED THIS TEMPLATE TO 100% SCALE. IF THIS IS PRINTED AT ANY SCALE OTHER THAN 100%, YOU COULD END UP DRILLING IN THE WRONG LOCATIONS ON YOUR VEHICLE.

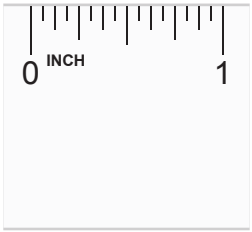

fig. 28

Template

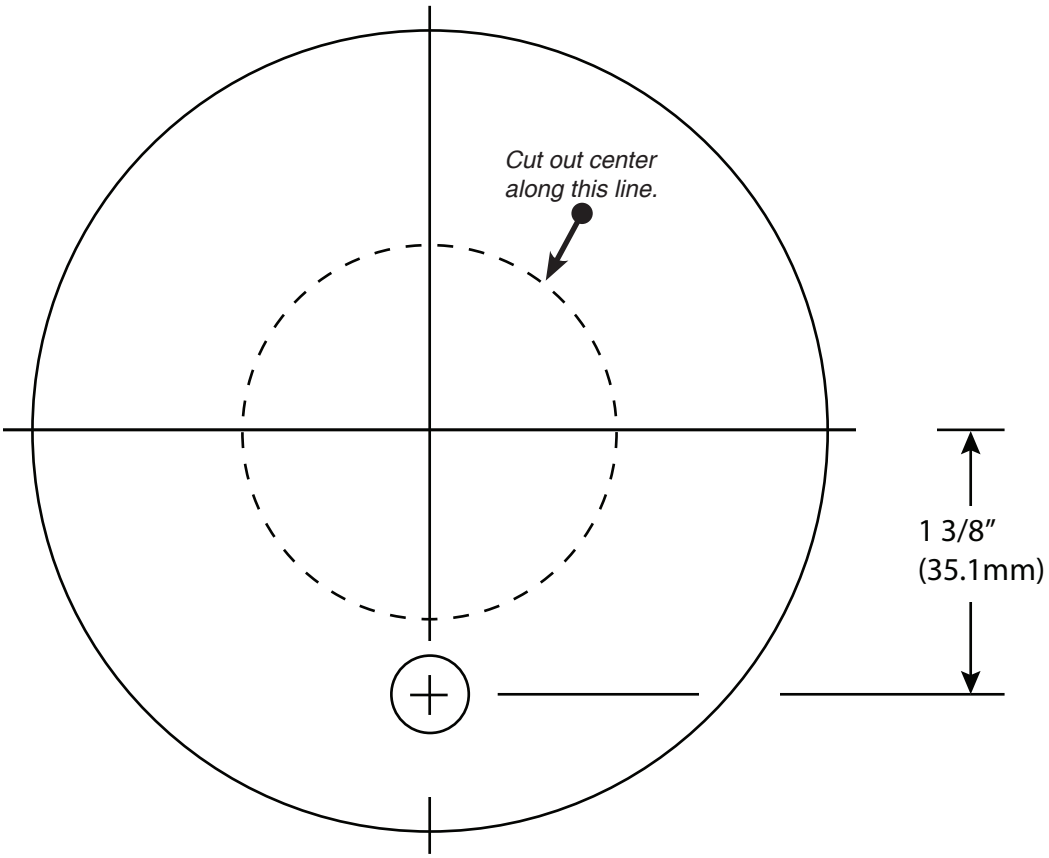

Need Help?

Contact our customer service department by calling (800) 248-0892. For calls from outside the USA or Canada, our local number is (517) 322-2144.

Thank you for purchasing Air Lift Performance products!

Air Lift Performance • 2727 Snow Road • Lansing, MI 48917 or PO Box 80167 • Lansing, MI 48908-0167
Toll Free (800) 248-0892 • Local (517) 322-2144 • Fax (517) 322-0240 • www.airliftperformance.com

Printed in the USA
JJC-1116