Kit 78579

Mercedes W205 RWD

Front Application

INSTALLATION GUIDE

For maximum effectiveness and safety, please read these instructions completely before proceeding with installation.

Failure to read these instructions can result in an incorrect installation.

MN-1106 • (011908) • ERN 9079

TABLE OF CONTENTS

A. Introduction 2
Notation Explanation 2

B. Important Safety Notices 2

C. Installation Diagram 3
Hardware List 3

D. Installing the Air Suspension 4
Preparing the Vehicle 4
Removing the Front Damper 4
Installing the Air Suspension 7
Routing the Air Lines 9

E. Finished Installation Photo 9

F. Before Operating 10
Setting the Ride Height. 10
Torque Specifications 10
Suggested Driving Air Pressure 10
Maximum Air Pressure 10
Check for Binding. 10
Installation Checklist. 11
Damping Adjustment 11

Limited Warranty and Return Policy 12

A. Introduction

Air Lift Performance thanks you for purchasing the most complete, fully engineered high-performance air suspension made for the Mercedes W205 RWD. Read these installation instructions to correctly and safely set up the vehicle for a #lifeonair.

Air Lift assumes that the installer has the mechanical knowledge and ability to work on vehicle suspension systems and has basic tools necessary to complete a suspension replacement project.

Air Lift reserves the right to make changes and improvements to its products and publications at any time. For the latest version of this manual, contact Air Lift Performance at **(800) 248-0892** or visit **www.airliftperformance.com**.

An Air Lift Performance air management system is highly recommended for this product. Learn more at **air-lift.co/productlines**.

NOTATION EXPLANATION

Hazard notations appear in various locations in this publication. Information which is highlighted by one of these notations must be observed to help minimize risk of personal injury or possible improper installation which may render the vehicle unsafe. Notes are used to help emphasize areas of procedural importance and provide helpful suggestions. The following definitions explain the use of these notations as they appear throughout this guide.

DANGER — INDICATES IMMEDIATE HAZARDS WHICH WILL RESULT IN SEVERE PERSONAL INJURY OR DEATH.

WARNING — INDICATES HAZARDS OR UNSAFE PRACTICES WHICH COULD RESULT IN SEVERE PERSONAL INJURY OR DEATH.

CAUTION — INDICATES HAZARDS OR UNSAFE PRACTICES WHICH COULD RESULT IN DAMAGE TO THE VEHICLE OR MINOR PERSONAL INJURY.

NOTE — *Indicates a procedure, practice or hint which is important to highlight.*

B. Important Safety Notices

WARNING — DO NOT INFLATE AIR SPRINGS WHILE OFF OF THE VEHICLE. DAMAGE TO ASSEMBLY MAY RESULT AND VOID WARRANTY.

WARNING — DO NOT WELD TO OR MODIFY PERFORMANCE STRUTS/SHOCKS IN ANY WAY. DAMAGE TO UNIT MAY OCCUR AND WILL VOID WARRANTY.

CAUTION — AFTER INSTALLATION, ENSURE ALL ORIGINAL EQUIPMENT VEHICLE SAFETY FEATURES ARE PROPERLY CALIBRATED BY A QUALIFIED TECHNICIAN. CHANGING VEHICLE HEIGHT MAY AFFECT FUNCTIONING OF SAFETY SENSORS AND CAMERAS.

C. Installation Diagram

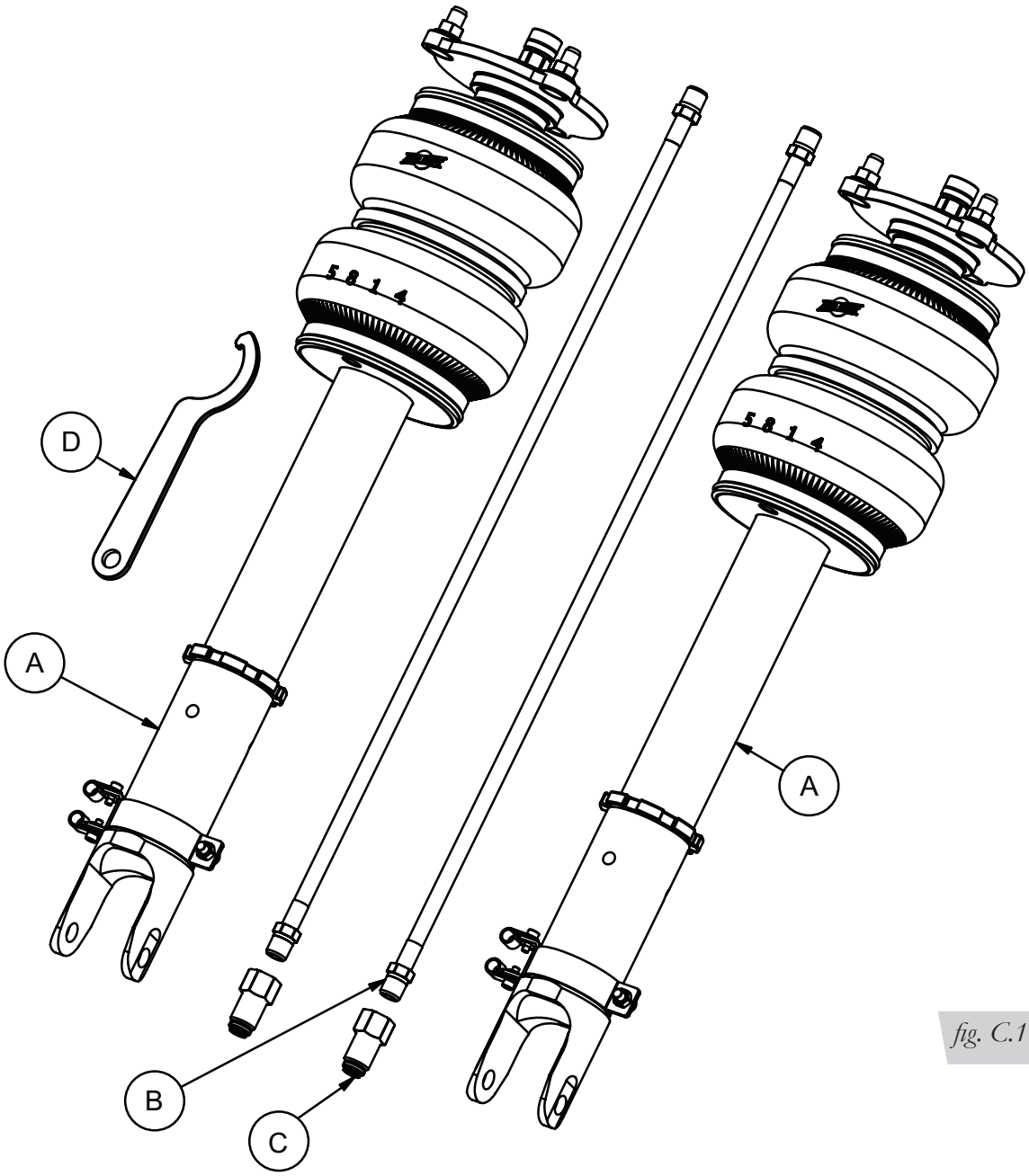

fig. C.1

HARDWARE LIST

Item	Part #	Description	Qty
A	35447	Front shock, W205 RWD	2
B	20997	Leader line, 1/4"	2
C	21810	1/4" FNPT x 1/4" PTC fitting	2
D	11289	M50 Spanner	1

STOP! Missing or damaged parts? Call Air Lift customer service at (800) 248-0892 for a replacement part.

D. Installing the Air Suspension

NOTE *See "Important Safety Notices" on page 2.*

⚠ CAUTION RAISE THE REAR OF THE VEHICLE WITH A JACK AT THE APPROVED LIFTING POINTS AND USE SAFETY STANDS TO SUPPORT THE VEHICLE.

REMOVING THE REAR SUSPENSION

1. Elevate and support the vehicle with a hoist or safety stands.
2. Remove the front wheel (Figs. D.1 & D.2).

fig. D.1

fig. D.2

REMOVING THE FRONT DAMPER

1. Unplug the wires connected to the module at the side of the damper body (Figs. D.3 & D.4). Secure wires away from heat, sharp edges, rotating components, and direct exposure to debris.

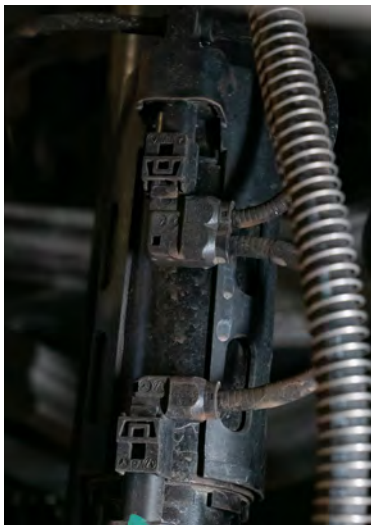

fig. D.3

fig. D.4

2. Unclip the sensor wire bracket from the damper (Figs. D.5 & D.6).

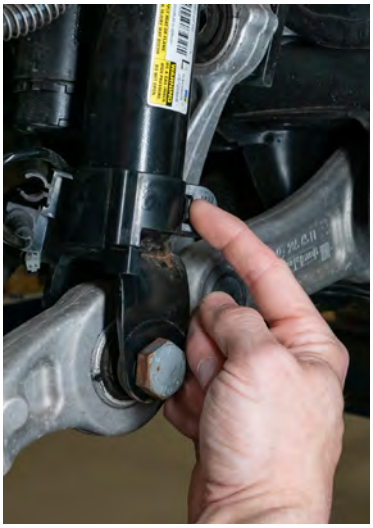

fig. D.5

fig. D.6

3. Disconnect the stabilizer bar linkage from spring control arm (Fig. D.7).

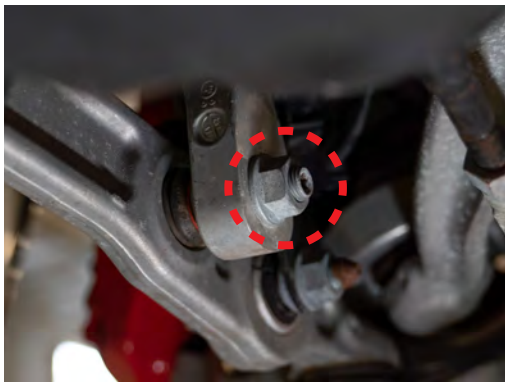

fig. D.7

4. Unbolt the damper assembly from the spring control arm (Fig. D.8).

fig. D.8

5. Unbolt and remove the undertray (Figs. D.9 & D.10).

fig. D.9

fig. D.10

6. Unbolt the spring control arm from the front axle carrier (Figs. D.11 & D.12).

fig. D.11

fig. D.12

7. Within the engine compartment, remove the plastic cover and three upper mount bolts (Figs. D.13 & D.14).

fig. D.13

fig. D.14

8. Remove the damper assembly from the vehicle (Fig. D.15).

fig. D.15

INSTALLING THE AIR SUSPENSION

1. Begin applying thread sealant to the threads of the leader line (B). Tighten the fitting (C) to the leader line (1 3/4 turns beyond hand-tight). Tighten the leader line into the air spring 1 3/4 turns beyond hand-tight (Fig. D.16).

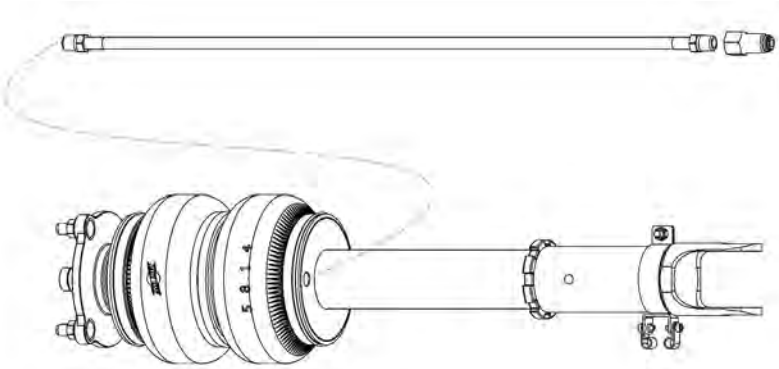

fig. D.16

2. Attach the upper mount to the chassis. Torque nuts to 50Nm (37 lb.-ft.) (Fig. D.17).

fig. D.17

3. Reattach the spring control arm to the axle carrier. Torque bolt to 120Nm + 180 degrees (89 lb.-ft. + 180 degrees) (Fig. D.18).

fig. D.18

4. Attach the lower mount (1) and the stabilizer end link (2) to the control arm. Torque the end link to 85Nm (63 lb.-ft.). Torque shock mount bolt at desired ride height with load to 95Nm + 45 degrees (66 lb.-ft. + 45 degrees) (Fig. D.19).

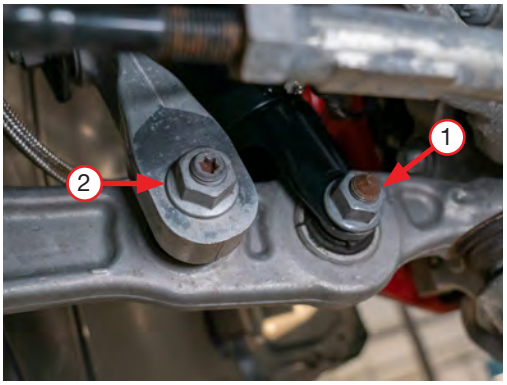

fig. D.19

5. Unbolt the sensor wire clips, route the wiring through the clips and reattach (Fig. D.20).

fig. D.20

6. Reattach the undertray (Fig. D.21).

fig. D.21

7. Reinstall wheels and torque to 150Nm (111lb.-ft.).

ROUTING THE AIR LINES

⚠ WARNING

AFTER INSTALLATION, ENSURE ALL ORIGINAL EQUIPMENT VEHICLE SAFETY FEATURES ARE PROPERLY CALIBRATED BY A QUALIFIED TECHNICIAN. CHANGING VEHICLE HEIGHT MAY AFFECT FUNCTIONING OF SAFETY SENSORS AND CAMERAS.

1. Fully compress the suspension using a jack. With the suspension compressed, review the best routing for the air line that is clear of all suspension and steering components.
2. Routing should allow for the suspension to extend and steer without kinking, pulling the line tight or rubbing on other components. Following the brake line routing is often a good place to start. Check clearances to all other components.

E. Finished Installation Photo

fig. E.1

F. Before Operating

SETTING THE RIDE HEIGHT

1. Refer to the User Guide supplied with this kit to set up the suspension.

Torque Specifications		
Location	Nm	Lb.-ft.
Damper to spring control arm	95+ 45 degrees	70 + 45 degrees
Spring control arm to front axle carrier	120 + 180 degrees	89 + 180 degrees
Upper mount to chassis	50	37
Stabilizer linkage to spring control arm	85	63
Wheel bolts	150	111
Damper locking collar	45 degrees beyond hand-tight	
Leader line and fitting	1 3/4 turns beyond hand-tight with thread sealant	

Table 1

Suggested Driving Air Pressure	Maximum Air Pressure
60-85 PSI (4.1-5.9BAR)	**125 PSI (8.6BAR)**
FAILURE TO MAINTAIN ADEQUATE MINIMUM PRESSURE (OR PRESSURE PROPORTIONAL TO LOAD) MAY RESULT IN EXCESSIVE BOTTOMING OUT AND **WILL VOID THE WARRANTY**.	

Table 2

CHECK FOR BINDING

1. Inflate and deflate the system (do not exceed 125 PSI [8.6BAR]) to check for clearance or binding issues. With the air springs deflated, check clearances on everything so as not to pinch brake lines, vent tubes, etc. Clear lines if necessary.
2. Inflate the air springs to 75-90 PSI (5.2-6.2BAR) and check all connections for leaks.

⚠ CAUTION

MAKE SURE THE FRONT WHEELS ARE STRAIGHT WHEN DEFLATING AND REINFLATING AIR SPRINGS.

INSTALLATION CHECKLIST

- ☐ **Clearance** — Inflate the air springs to 75-90 PSI (5.2-6.2BAR) and make sure there is at least 1/2” (13mm) clearance from anything that might rub against the air spring. This should be checked with the air spring fully inflated and fully deflated.
- ☐ **Leak** — Inflate the air springs to 75-90 PSI (5.2-6.2BAR) and check all connections for leaks. All leaks must be eliminated before the vehicle is road tested.
- ☐ **Heat** — Be sure there is sufficient clearance from heat sources, at least 6" (152mm) from air springs and air lines. If a heat shield was included in the kit, install it. If there is no heat shield, but one is required, call Air Lift customer service at **(800) 248-0892**.
- ☐ **Fastener** — Recheck all bolts for proper torque.
- ☐ **Road** — Inflate the air springs to recommended driving pressures (Table 2). Drive the vehicle 10 miles (16km) and recheck for clearance, loose fasteners and air leaks.
- ☐ **Operating instructions** — If professionally installed, the installer should review the operating instructions with the owner. Be sure to provide the owner with all paperwork that came with the kit.

DAMPING ADJUSTMENT

1. The dampers in this kit have 30 settings, or “clicks,” of adjustable compression and rebound damping characteristics. Damping is changed through the damper rod using the supplied adjuster (Figs. F.1 & F.2) or a 3mm hex key (not included).
2. Turn the adjuster clockwise (H) and the damping settings are hardened, reducing oscillations and body motion. Turn the adjuster counterclockwise (S) and the damping is softened.
3. Each damper in this kit is preset to “-16 clicks.” This means that the damper is adjusted 16 clicks away from full stiff, which starts at 0. Counting up from full stiff is the preferred method of keeping track of, or setting, damping. This setting was developed on a 2018 Mercedes C63S.

For more information, refer to the User Guide.

fig. F.1

fig. F.2

Limited Warranty and Return Policy

Air Lift Company provides a 1-year limited warranty to the original purchaser of Air Lift Performance damper kits from the date of original purchase, that the products will be free from defects in workmanship and materials when used on vehicles as specified by Air Lift Company and under normal operating conditions, subject to the requirements and exclusions set forth in the full Limited Warranty and Return Policy that is available online at **www.airliftperformance.com/warranty**.

For additional warranty information contact Air Lift Company customer service.

Air Lift Company reserves the right to make changes and improvements to its products and publications at any time. For the latest version of this manual, contact Air Lift Company at **(800) 248-0892** or visit **www.airliftperformance.com**.

Need Help?

The Air Lift Company customer service department is open from 8 a.m. to 8 p.m. ET Monday through Friday. Call (800) 248-0892 or (517) 322-2144 for calls from outside the U.S. and Canada.

CONNECT BY SEARCHING FOR **AIR LIFT PERFORMANCE** *#LIFEONAIR*

Thank you for purchasing Air Lift Performance products!

MADE IN USA WITH GLOBAL COMPONENTS

Air Lift Performance • 2727 Snow Road • Lansing, MI 48917 or P.O. Box 80167 • Lansing, MI 48908-0167
Toll Free (800) 248-0892 • Local (517) 322-2144 • Fax (517) 322-0240 • www.airliftperformance.com

Printed in the USA
JJC-0819

California: ⚠WARNING: Cancer and Reproductive Harm – www.P65Warnings.ca.gov

Kit 78679/78680

Mercedes W205

Rear Application

With or Without Shocks

INSTALLATION GUIDE

For maximum effectiveness and safety, please read these instructions completely before proceeding with installation.

Failure to read these instructions can result in an incorrect installation.

MN-1107 • (011908) • ERN 9079

TABLE OF CONTENTS

A. Introduction 2
Notation Explanation 2

B. Important Safety Notices 2

C. Installation Diagram 3
Hardware List 3

D. Installing the Air Suspension 4
Removing the Rear Suspension 4
Installing the Air Suspension 7
Finished Installation Photo 10
Routing the Air Lines 10

E. Before Operating 11
Torque Specifications 11
Suggested Driving Air Pressure and Maximum Air Pressure 11
Check for Binding 11
Installation Checklist 12
Damping Adjustment 12

Limited Warranty and Return Policy 13

A. Introduction

Air Lift Performance thanks you for purchasing the most complete, fully engineered high-performance air suspension made for the Mercedes W205 Rear. Read these installation instructions to correctly and safely set up the vehicle for a #lifeonair.

Air Lift assumes that the installer has the mechanical knowledge and ability to work on vehicle suspension systems and has basic tools necessary to complete a suspension replacement project. Special tools needed to complete the installation are noted on the *Installation Diagram* page.

Air Lift reserves the right to make changes and improvements to its products and publications at any time. For the latest version of this manual, contact Air Lift Performance at **(800) 248-0892** or visit **www.airliftperformance.com**.

An Air Lift Performance air management system is highly recommended for this product. Learn more at **air-lift.co/productlines**.

NOTATION EXPLANATION

Hazard notations appear in various locations in this publication. Information which is highlighted by one of these notations must be observed to help minimize risk of personal injury or possible improper installation which may render the vehicle unsafe. Notes are used to help emphasize areas of procedural importance and provide helpful suggestions. The following definitions explain the use of these notations as they appear throughout this guide.

DANGER INDICATES IMMEDIATE HAZARDS WHICH WILL RESULT IN SEVERE PERSONAL INJURY OR DEATH.

WARNING INDICATES HAZARDS OR UNSAFE PRACTICES WHICH COULD RESULT IN SEVERE PERSONAL INJURY OR DEATH.

CAUTION INDICATES HAZARDS OR UNSAFE PRACTICES WHICH COULD RESULT IN DAMAGE TO THE VEHICLE OR MINOR PERSONAL INJURY.

NOTE *Indicates a procedure, practice or hint which is important to highlight.*

B. Important Safety Notices

WARNING DO NOT INFLATE AIR SPRINGS WHILE OFF OF THE VEHICLE. DAMAGE TO ASSEMBLY MAY RESULT AND VOID WARRANTY.

CAUTION DO NOT WELD TO OR MODIFY PERFORMANCE STRUTS/SHOCKS IN ANY WAY. DAMAGE TO UNIT MAY OCCUR AND WILL VOID WARRANTY.

WARNING AFTER INSTALLATION, ENSURE ALL ORIGINAL EQUIPMENT VEHICLE SAFETY FEATURES ARE PROPERLY CALIBRATED BY A QUALIFIED TECHNICIAN. CHANGING VEHICLE HEIGHT MAY AFFECT FUNCTIONING OF SAFETY SENSORS AND CAMERAS.

C. Installation Diagram

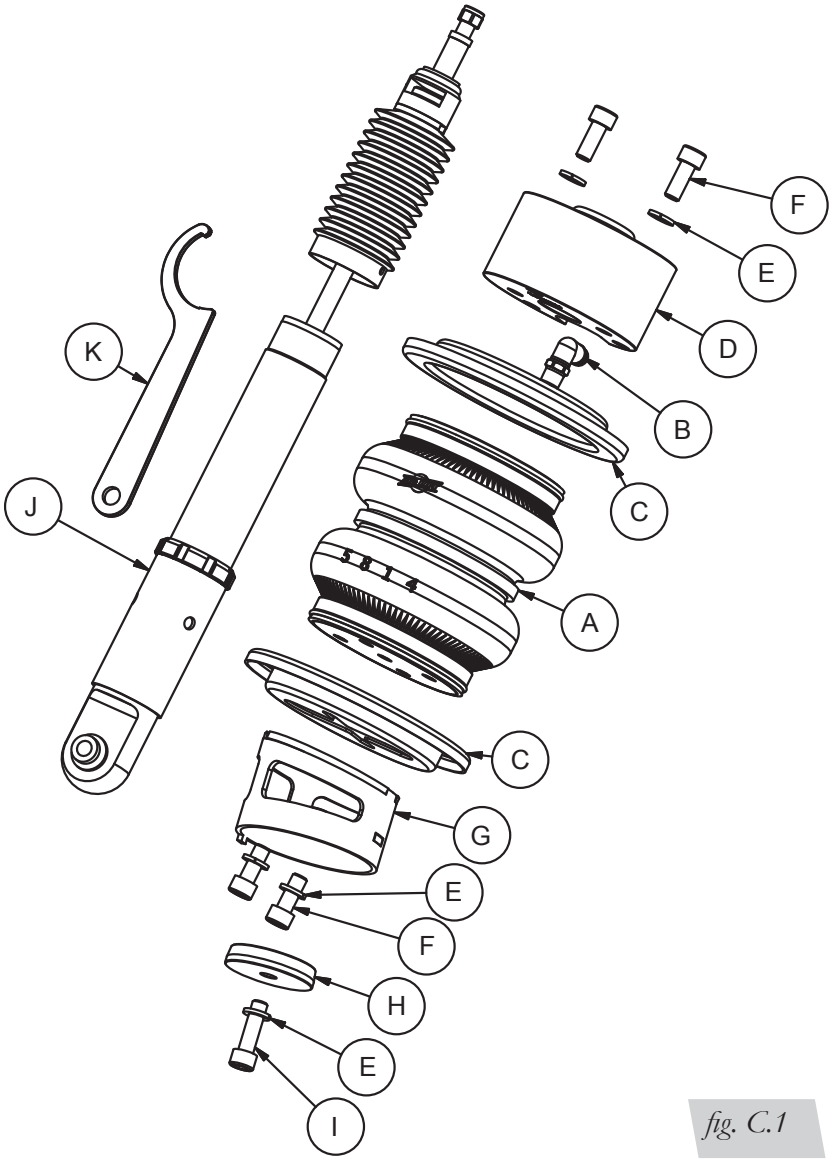

fig. C.1

HARDWARE LIST

Item	Part #	Description	Qty
A	58550	Air spring	2
B	21779	1/4" MNPT x 1/4" PTC Elbow fitting	2
C	11801	Roll plate	4
D	13301	Upper spring seat spacer	2
E	18628	M10 Split lock washer	10
F	17516	M10-1.5x25 Socket head cap screw	8
G	03045	Rear lower bracket	2
H	13302	Centering spacer	2
I	17518	M10-1.5x35 Socket head cap screw	2
J	26607	Rear shock	2
K	11291	M44 Spanner	1

STOP! Missing or damaged parts? Call Air Lift customer service at (800) 248-0892 for a replacement part.

D. Installing the Air Suspension

NOTE

See "Important Safety Notices" on page 2.

⚠ CAUTION

RAISE THE REAR OF THE VEHICLE WITH A JACK AT THE APPROVED LIFTING POINTS AND USE SAFETY STANDS TO SUPPORT THE VEHICLE.

REMOVING THE REAR SUSPENSION

1. Raise the vehicle and remove the wheel. Support the suspension with a jack (Figs. D.1 & D.2).

fig. D.1

fig. D.2

2. Remove the spring control arm cover (Figs. D.3 & D.4).

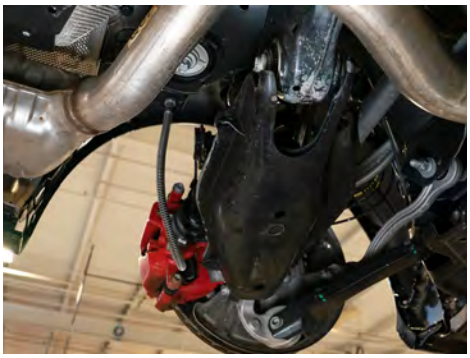

fig. D.3

fig. D.4

3. If installing No Shock Kit 78680, move to the next step. Unplug the wires connected to the module at the side of the damper body (Fig. D.5). Secure wires away from heat, sharp edges, rotating components, and direct exposure to debris (Fig. D.6).

fig. D.5

fig. D.6

4. Support the spring control arm inner pivot (1), remove the shock bolt (2) and the attaching spring control arm bolt (3) from the crossmember (Fig. D.7).

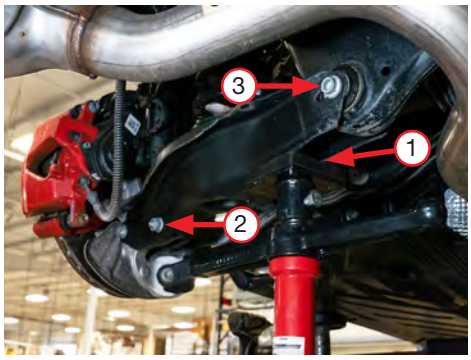

fig. D.7

5. Lower the spring control arm and remove the coil spring (Fig. D.8).

fig. D.8

6. Remove the plastic upper spring seat without damaging the retainer clip (Figs. D.9 & D.10). The retaining clip and rubber isolator shall remain attached to the chassis.

fig. D.9

fig. D.10

7. Remove the fender liner and unbolt the damper mount from the chassis (Figs. D.11 & D.12).

fig. D.11

fig. D.12

8. Disassemble the upper mount from the damper assembly (Figs. D.13 & D.14).

fig. D.13

fig. D.14

INSTALLING THE AIR SUSPENSION

1. If installing No Shock Kit 78680, move to Step 3. With the spacer on the damper rod (J), assemble to the upper mount (Figs. D.15 & D.16). Torque the rod nut to 29Nm (21 lb.-ft.).

fig. D.15

fig. D.16

2. Attach the upper mount to the chassis (Fig. D.17). Torque to Stage 1: 15Nm (11 lb.-ft.), then Stage 2: 36Nm (27 lb.-ft.).

fig. D.17

3. Apply thread sealant to the threads of the fitting (B) and tighten into the air spring (A) 1 3/4 turns beyond hand-tight (Fig. D.18).

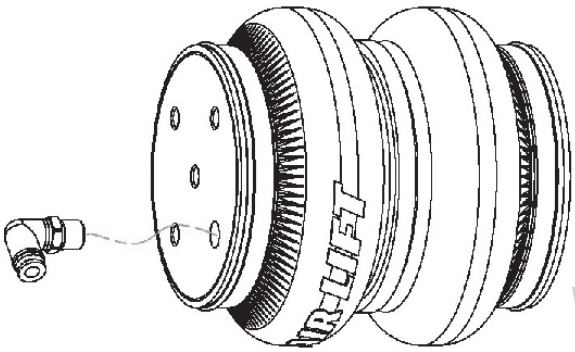

fig. D.18

4. Assemble the roll plate (C) and upper spring seat spacer (D) to the air spring (A) with the bolts (F) and washers (E) supplied (Fig. D.19). Torque bolts to 27Nm (20 lb.-ft.).

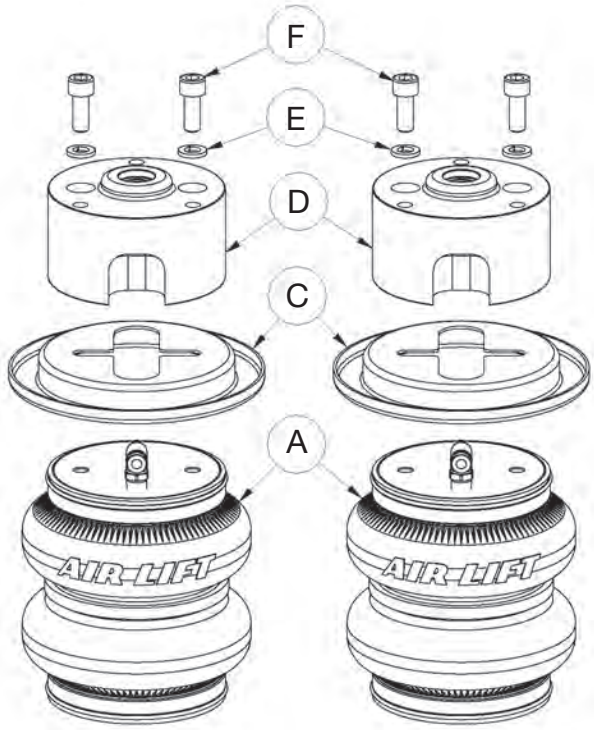

fig. D.19

5. Assemble the bottom roll plate (C) and orient the rear lower bracket (G) with the locating tab 90 degrees from the air fitting (B). Assemble one opposite the other to allow the air fitting to face the rear of the vehicle when installed (Fig. D.20). Torque the bolts (F) to 27Nm (20 lb.-ft.).

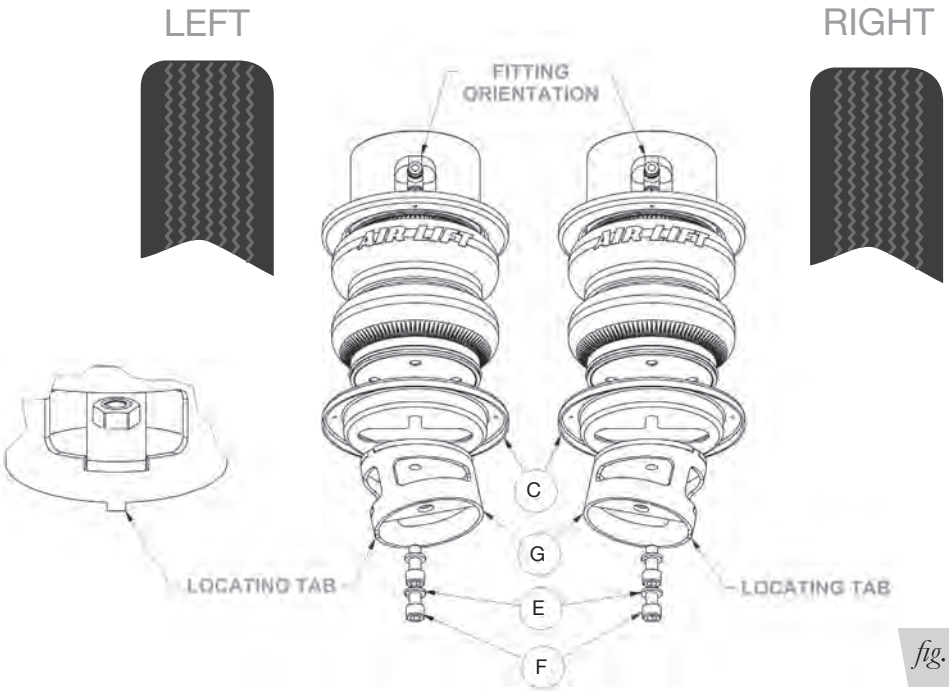

fig. D.20

6. Insert the spring assembly and orient the lower bracket (G) locating tab with the hole in the lower spring seat (Fig. D.21). Reattach the spring control arm to the rear axle carrier (Fig. D.22). Torque at desired ride height with load to 80Nm + 90 degrees (59 lb.-ft. + 90 degrees).

fig. D.21

fig. D.22

7. Apply the centering spacer to the spring control arm along with a washer and bolt (Fig. D.23). Secure the assembly in place by torquing the bolt to 27Nm (20 lb.-ft.).

fig. D.23

8. Attach the shock to the spring control arm (Fig. D.24). Torque at desired ride height with load to 90Nm + 45 degrees (66 lb.-ft. + 45 degrees).

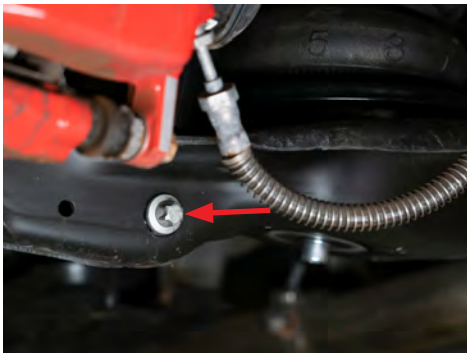

fig. D.24

9. Reattach the plastic cover to the spring control arm and fender liner.
10. Reinstall wheels and torque to 150Nm (111 lb.-ft.).

FINISHED INSTALLATION PHOTO

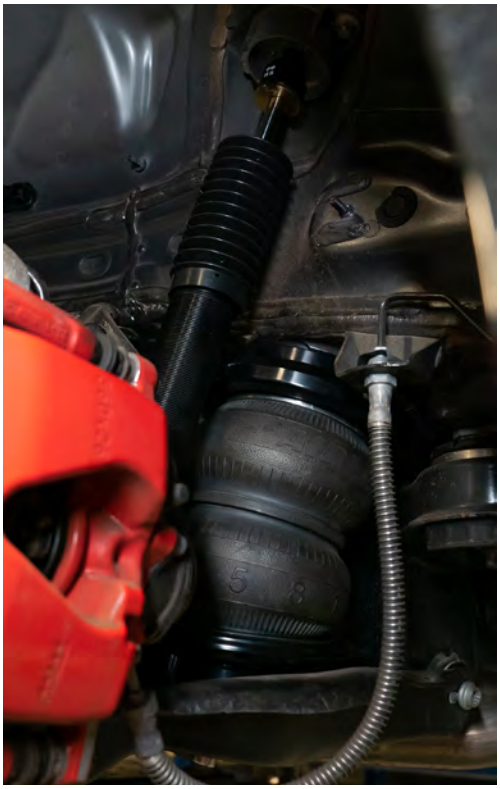

fig. D.25

ROUTING THE AIR LINES

1. Fully compress the suspension using a jack. With the suspension compressed, review the best routing for the air line that is clear of all suspension components and axle.
2. Routing should also allow for the suspension to extend without kinking or pulling the line tight or rubbing on other components. Following the brake line routing is often a good place to start. Check clearances to all other components.

⚠ WARNING

AFTER INSTALLATION, ENSURE ALL ORIGINAL EQUIPMENT VEHICLE SAFETY FEATURES ARE PROPERLY CALIBRATED BY A QUALIFIED TECHNICIAN. CHANGING VEHICLE HEIGHT MAY AFFECT FUNCTIONING OF SAFETY SENSORS AND CAMERAS.

E. Before Operating

Read the User Guide that came with this kit to set up the suspension.

Torque Specifications		
Location	Nm	Lb.-ft.
Air spring fasteners	27	20
Centering spacer bolt	27	20
Damper to spring control arm	90 + 45 degrees	66 + 45 degrees
Spring control arm to rear axle carrier	80 + 90 degrees	59 + 90 degrees
Upper mount to chassis	Stage 1: 15 Stage 2: 36	Stage 1: 11 Stage 2: 27
Wheel bolts	150	111
Damper locking collar	45 degrees beyond hand-tight	
Air fitting	1 3/4 turns beyond hand-tight with thread sealant	

Table 1

SEDAN:

Suggested Driving Air Pressure	Maximum Air Pressure
70-100 PSI (4.8-6.9BAR)	**125 PSI (8.6BAR)**

WAGON:

Suggested Driving Air Pressure	Maximum Air Pressure
90-120 PSI (6.2-8.3BAR)	**125 PSI (8.6BAR)**
FAILURE TO MAINTAIN ADEQUATE MINIMUM PRESSURE (OR PRESSURE PROPORTIONAL TO LOAD) MAY RESULT IN EXCESSIVE BOTTOMING OUT AND **WILL VOID THE WARRANTY**.	

Table 2

CHECK FOR BINDING

1. Inflate and deflate the system (do not exceed 125 PSI [8.6BAR]) to check for clearance or binding issues. With the air springs deflated, check clearances on everything so as not to pinch brake lines, vent tubes, etc. Clear lines if necessary.
2. Inflate the air springs to 75-90 PSI (5.2-6.2BAR) and check all connections for leaks.

INSTALLATION CHECKLIST

- ☐ **Clearance** — Inflate the air springs to 75-90 PSI (5.2-6.2BAR) and make sure there is at least 1/2" (13mm) clearance from anything that might rub against the air spring. This should be checked with the air spring fully inflated and fully deflated.
- ☐ **Leak** — Inflate the air springs to 75-90 PSI (5.2-6.2BAR) and check all connections for leaks. All leaks must be eliminated before the vehicle is road tested.
- ☐ **Heat** — Be sure there is sufficient clearance from heat sources, at least 6" (152mm) from air springs and air lines. If a heat shield was included in the kit, install it. If there is no heat shield, but one is required, call Air Lift customer service at **(800) 248-0892**.
- ☐ **Fastener** — Recheck all bolts for proper torque.
- ☐ **Road** — Inflate the air springs to recommended driving pressures (Table 2). Drive the vehicle 10 miles (16km) and recheck for clearance, loose fasteners and air leaks.
- ☐ **Operating instructions** — If professionally installed, the installer should review the operating instructions with the owner. Be sure to provide the owner with all paperwork that came with the kit.

DAMPING ADJUSTMENT

1. The dampers in this kit have 30 settings, or "clicks," of adjustable compression and rebound damping characteristics. Damping is changed through the damper rod using the supplied adjuster (Fig. E.1) or a 3mm hex key (not included).
2. Turn the adjuster clockwise (H) and the damping settings are hardened, reducing oscillations and body motion. Turn the adjuster counterclockwise (S) and the damping is softened.
3. Each damper in this kit is preset to "-13 clicks." This means that the damper is adjusted 13 clicks away from full stiff, which starts at 0. Counting up from full stiff is the preferred method of keeping track of, or setting, damping. This setting was developed on a 2018 Mercedes C63S.

For more information, refer to the User Guide.

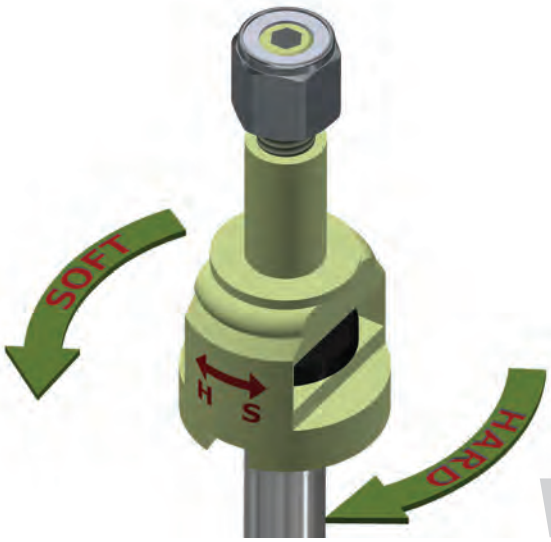

fig. E.1

Limited Warranty and Return Policy

Air Lift Company provides a 1-year limited warranty to the original purchaser of Air Lift Performance damper kits from the date of original purchase, that the products will be free from defects in workmanship and materials when used on vehicles as specified by Air Lift Company and under normal operating conditions, subject to the requirements and exclusions set forth in the full Limited Warranty and Return Policy that is available online at **www.airliftperformance.com/warranty**.

For additional warranty information contact Air Lift Company customer service.

Air Lift Company reserves the right to make changes and improvements to its products and publications at any time. For the latest version of this manual, contact Air Lift Company at **(800) 248-0892** or visit **www.airliftperformance.com**.

Need Help?

The Air Lift Company customer service department is open from 8 a.m. to 8 p.m. ET Monday through Friday. Call (800) 248-0892 or (517) 322-2144 for calls from outside the U.S. and Canada.

CONNECT BY SEARCHING FOR **AIR LIFT PERFORMANCE** *#LIFEONAIR*

Thank you for purchasing Air Lift Performance products!

MADE IN USA WITH GLOBAL COMPONENTS

Air Lift Performance • 2727 Snow Road • Lansing, MI 48917 or P.O. Box 80167 • Lansing, MI 48908-0167
Toll Free (800) 248-0892 • Local (517) 322-2144 • Fax (517) 322-0240 • www.airliftperformance.com

Printed in the USA
JJC-0819

California: ⚠WARNING: Cancer and Reproductive Harm – www.P65Warnings.ca.gov