Kit 75518

MK IV Platform

Slam Front Application

NOTE: FOR USE ON VEHICLES WITH FRAME C-NOTCH MODIFICATIONS ONLY. FRONT SWAY BAR MUST BE REMOVED.

INSTALLATION GUIDE

For maximum effectiveness and safety, please read these instructions completely before proceeding with installation.

Failure to read these instructions can result in an incorrect installation.

MN-756 • (031409) • ECR 8044

TABLE OF CONTENTS

Introduction 2
Notation Explanation 2

Important Safety Notices 2

Installation Diagram 3
Hardware List 3

Installing the Air Suspension 4
Preparing the Vehicle 4
Removing the Strut 4
Installing the New Strut Assembly x
Routing the Air Lines 7

Before Operating 8
Setting the Ride Height 8
Suggested Driving Air Pressure and Maximum Air Pressure 8
Check for Binding 8
Aligning the Vehicle 8
Installation Checklist 9
Post-installation Checklist 9

Use, Maintenance and Servicing 10
Tuning the Air Pressure 10

Troubleshooting Guide 11
Tips for Installing Air Lines 12
Checking for Leaks 12
Fixing Leaks 12

Drilling Templates 13

Limited Warranty and Return Policy 15

Replacement Part Information 16

Contact Information 16

Introduction

Air Lift Performance thanks you for purchasing the most complete, fully engineered high-performance air suspension made for the Make Model. Read these installation instructions to correctly and safely set up the vehicle for a #lifeonair.

Air Lift assumes that the installer has the mechanical knowledge and ability to work on vehicle suspension systems and has basic tools necessary to complete the project. Special tools needed to complete the installation are noted on the Installation Diagram page.

Air Lift reserves the right to make changes and improvements to its products and publications at any time. For the latest version of this manual, contact Air Lift Performance at **(800) 248-0892** or visit **www.airliftperformance.com**.

An Air Lift Performance air management system is highly recommended for this product. Learn more at **air-lift.co/productlines**.

NOTATION EXPLANATION

Hazard notations appear in various locations in this publication. Information which is highlighted by one of these notations must be observed to help minimize risk of personal injury or possible improper installation which may render the vehicle unsafe. Notes are used to help emphasize areas of procedural importance and provide helpful suggestions. The following definitions explain the use of these notations as they appear throughout this guide.

DANGER — INDICATES IMMEDIATE HAZARDS WHICH WILL RESULT IN SEVERE PERSONAL INJURY OR DEATH.

WARNING — INDICATES HAZARDS OR UNSAFE PRACTICES WHICH COULD RESULT IN SEVERE PERSONAL INJURY OR DEATH.

CAUTION — INDICATES HAZARDS OR UNSAFE PRACTICES WHICH COULD RESULT IN DAMAGE TO THE MACHINE OR MINOR PERSONAL INJURY.

NOTE — *Indicates a procedure, practice or hint which is important to highlight.*

Important Safety Notices

WARNING — DO NOT INFLATE AIR SPRINGS WHILE OFF OF THE VEHICLE. DAMAGE TO ASSEMBLY MAY RESULT AND VOID WARRANTY.

CAUTION — DO NOT WELD TO OR MODIFY PERFORMANCE STRUTS/SHOCKS IN ANY WAY. DAMAGE TO UNIT MAY OCCUR AND WILL VOID WARRANTY.

Installation Diagram

HARDWARE LIST

Item	Part #	Description	Qty
A	35309	Strut ASM, VW MKIV Slam	2
B	20997	Leader Hose,1/4”	2
C	21810	Union, 1/4” FNPT-1/4” PTC	2
D	21987	1/4” FNPT X 3/8” Fitting	2
E		Thread Protector	6
F	18444	3/8” Flat Washer	6
G	18435	3/8”-16 Nylon Lock Nut	6

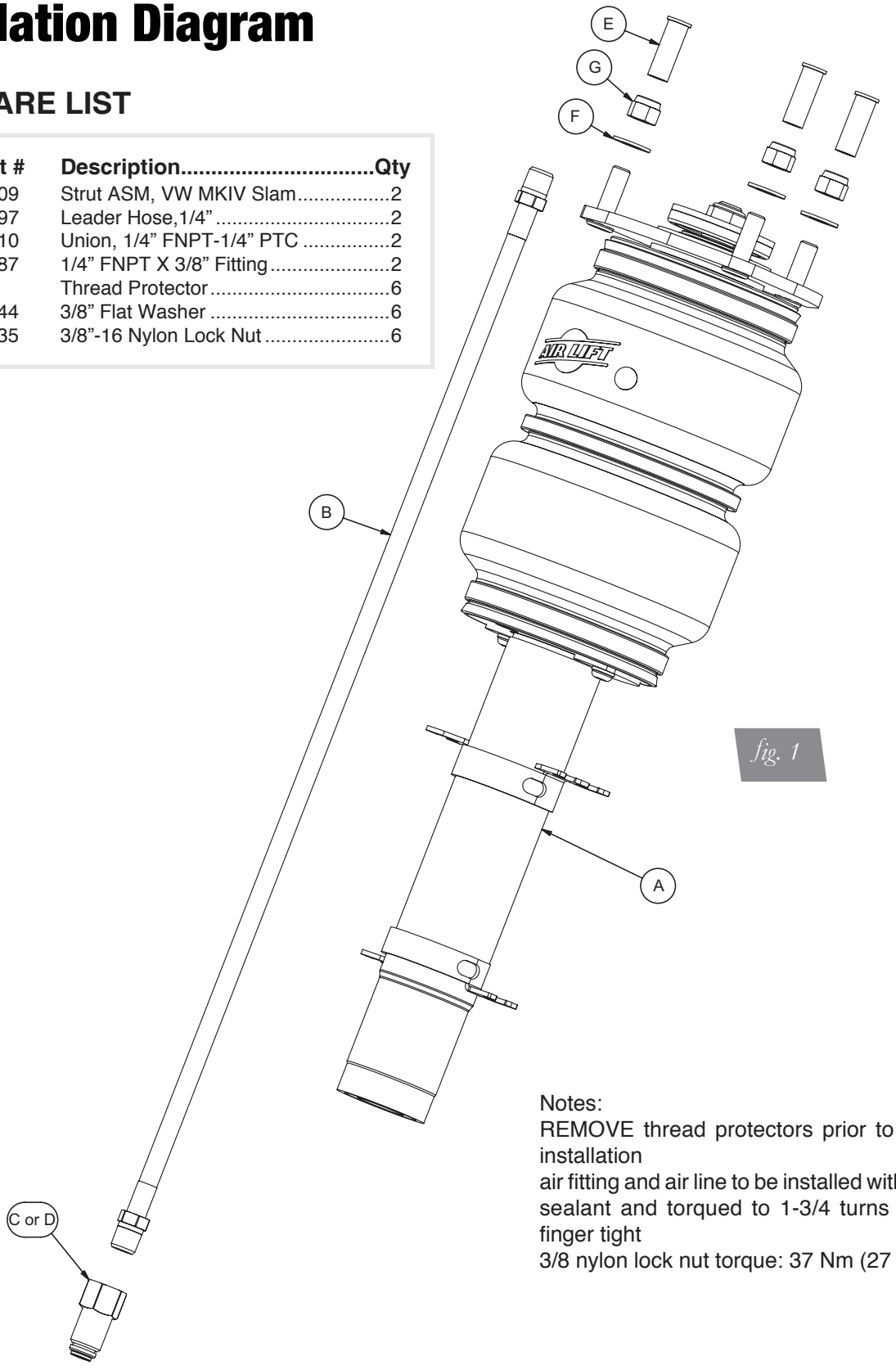

fig. 1

Notes:
REMOVE thread protectors prior to vehicle installation
air fitting and air line to be installed with thread sealant and torqued to 1-3/4 turns beyond finger tight
3/8 nylon lock nut torque: 37 Nm (27 lb.-ft.)

STOP! Missing or damaged parts? Call Air Lift customer service at (800) 248-0892 for a replacement part.

Installing the Air Suspension

PREPARING THE VEHICLE

1. Elevate the vehicle and support the body with a hoist or jack stands.
2. Remove the front wheels.

REMOVING THE STRUT

1. Unbolt the two mounting bolts for the brake caliper and secure or hang the caliper to the body of the vehicle (fig. 2).

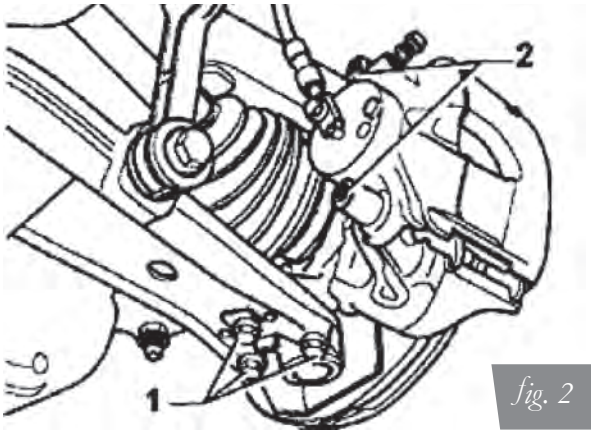

fig. 2

⚠ CAUTION

DO NOT ALLOW CALIPER TO HANG FROM THE BRAKE LINE OR DAMAGE MAY OCCUR.

2. Unclip the speed sensor wiring from the strut.
3. Remove the three lower bolts from the lower ball joint and control arm. Detach the ball joint and hub assembly from the control arm (fig. 2).
4. To remove the left and right front strut, mark the installed orientation and disconnect the axle from the transmission drive flange.

⚠ CAUTION

TO PREVENT DAMAGE TO THE AXLE JOINT, DO NOT ALLOW THE AXLE TO HANG FREE.

5. Remove the bolt at the back of the hub assembly to the strut.
6. Spread the hub assembly slot and push down on the hub to release the strut from its lower mount. (fig. 3 - Volkswagen-specific tool is spreader 3424)

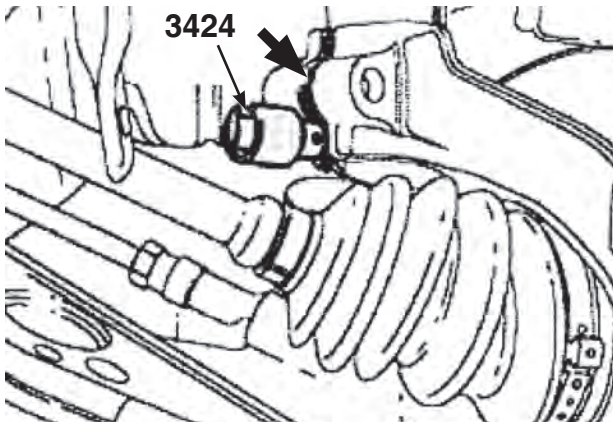

fig. 3

7. Remove the upper mount nut and remove strut from vehicle.
8. Reattach the lower control arm to the ball joint and torque bolts to 20Nm (15 lb.-ft.) + 90.
9. Reinstall the axle shaft to the transmission drive flange in the previously installed orientation. Torque bolts to:

    M8 x 18: 20Nm (15 lb.-ft.) + 90°

    M8 x 28: 20Nm (15 lb.-ft.) + 90°

    M8 x 48: 20Nm (15 lb.-ft.) + 90°

    M10 x 23: 50Nm (37 lb.-ft.) + 45°

    M10 x 52: 50Nm (37 lb.-ft.) + 45°

INSTALLING THE NEW STRUT ASSEMBLY

1. Install braided hose (B) into the lower end-cap of the airspring with thread sealant or Teflon tape applied to the threads of the fitting. Tighten finger tight and torque fitting 1 3/4 turns beyond hand tight. Attach the fitting (C or D) to the braided line with thread sealant (fig. 4).

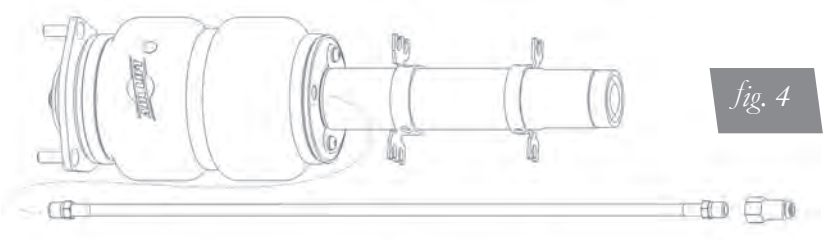

fig. 4

2. Cut out the template supplied in the back of this manual and place it over the coned strut tower as shown (fig. 5). One hole is to face outboard the vehicle with the other holes inboard. Taping a string across the strut tower centers can be a useful way to ensure the centerline of the outboard stud hole (figs. 6 & 7). Center punch and drill an 11/32” hole at each center punch (figs. 8 & 9).

fig. 5

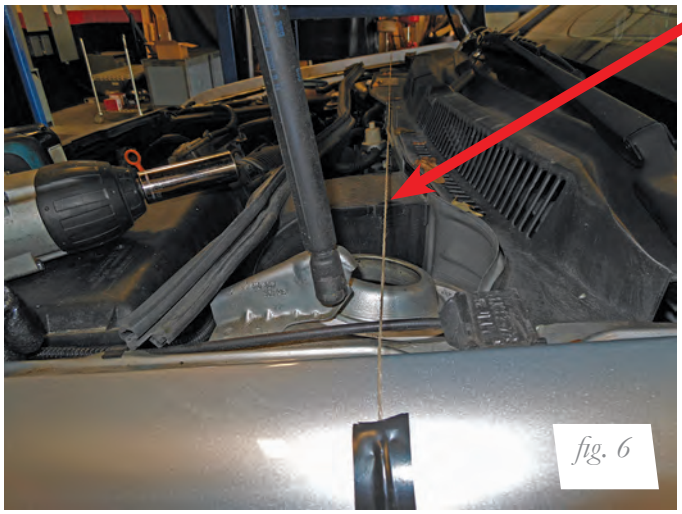

String to locate the strut tower centers.

3. Insert strut into the hub assembly. Reinstall the lower mounting bolt and torque to 70Nm (52 ft. lb.) +90 degrees.
4. Lift assembly into strut pocket and align upper mounting bolts with three holes. Using the supplied nuts and washers, tighten the upper mount to 37Nm (27 lb-ft).
5. Reinstall the brake caliper and torque to 28Nm (21 lb-ft).
6. Attach the speed sensor wiring to the new strut assembly.

ROUTING THE AIR LINES

1. Fully compress the suspension using a jack. With the suspension compressed, review the best routing for the leader hose that is clear of all suspension and steering components.
2. Routing should allow for the suspension to extend and steer without kinking, pulling the line tight or rubbing on other components. Following the brake line routing is often a good place to start. Check clearances to all other components.

Before Operating

SETTING THE RIDE HEIGHT

1. With the suspension fully compressed, take a measurement from the fender to a chosen reference point – typically the center of the axle. Record this measurement as max compression (MC).
2. Cycle the suspension to max extension (ME) and record the measurement from the fender to the same reference point.
3. Add ME and MC, then divide the total by 2. Set the suspension to this point. This position will give 50% stroke in either direction and is a starting point for ride height (Fig. 10).

Formula for Calculating Ride Height
(ME+MC)÷2=MID STROKE

fig. 10

4. With the suspension at this position, loosen, then re-torque all suspension bushing pivot joint fasteners to the manufacturer's specifications.

Suggested Driving Air Pressure	Maximum Air Pressure
45 PSI	**125 PSI**
FAILURE TO MAINTAIN ADEQUATE MINIMUM PRESSURE (OR PRESSURE PROPORTIONAL TO LOAD) MAY RESULT IN EXCESSIVE BOTTOMING OUT AND **WILL VOID THE WARRANTY**.	

Table 2

CHECK FOR BINDING

1. Inflate and deflate the system (do not exceed 125 PSI) to check for clearance or binding issues. With the air springs deflated, check clearances on everything so as not to pinch brake lines, vent tubes, etc. Clear lines if necessary.
2. Inflate the air springs to 75-90 PSI and check all connections for leaks.

⚠ CAUTION

MAKE SURE THE FRONT WHEELS ARE STRAIGHT WHEN DEFLATING AND REINFLATING AIR BAGS.

ALIGNING THE VEHICLE

1. Set the vehicle to the height at which it will most often be driven.
2. If the ride height is lower than stock, Air Lift Performance recommends loosening all pivot points (bolts, nuts) on any control arm, strut arm or radius rod that contains bushings. Once they have been loosened, re-torque to stock specifications (Table 1).

NOTE

It may be necessary to cycle the suspension to loosen the bushing from its mount. This will help re-orient the bushing at its new position based on the chosen ride height.

3. Get a shop alignment of the vehicle at the new chosen ride height.

INSTALLATION CHECKLIST

☐ **Clearance** — Inflate the air springs to 75-90 PSI and make sure there is at least 1/2" clearance from anything that might rub against the air spring. This should be checked with the air spring fully inflated and fully deflated.

☐ **Leak** — Inflate the air springs to 75-90 PSI and check all connections for leaks. All leaks must be eliminated before the vehicle is road tested.

☐ **Heat** — Be sure there is sufficient clearance from heat sources, at least 6" for air springs and air lines. If a heat shield was included in the kit, install it. If there is no heat shield, but one is required, call Air Lift customer service at **(800) 248-0892**.

☐ **Fastener** — Recheck all bolts for proper torque.

☐ **Road** — Inflate the springs to recommended driving pressures. Drive the vehicle 10 miles and recheck for clearance, loose fasteners and air leaks.

☐ **Operating instructions** — If professionally installed, the installer should review the operating instructions with the owner. Be sure to provide the owner with all paperwork that came with the kit.

POST-INSTALLATION CHECKLIST

☐ **Overnight leak down test** — Recheck air pressure 24 hours after installation and driving of the vehicle. If the pressure has dropped more than 5 PSI, there is a leak that must be fixed.

☐ **Air pressure requirements** — It is important to understand the air pressure requirements of the air spring system. Regardless of load, the air pressure should always be adjusted to maintain adequate ride height at all times while driving.

☐ **Thirty-day or 500-mile test** —Recheck the air spring system after 30 days or 500 miles, whichever comes first. If any part shows signs of rubbing or abrasion, the source should be identified and moved, if possible. If it is not possible to relocate the cause of the abrasion, the air spring may need to be remounted. If professionally installed, the installer should be consulted. Check all fasteners for tightness.

Use, Maintenance and Servicing

1. An Air Lift air management system is strongly recommended for this product, but it is possible to operate without one. The air lines can be routed to Schrader valves for use with a separate air compressor. Air lines and Schrader valves are not included with Air Lift Performance kits and would need to be purchased separately. To learn more about Air Lift management systems visit **air-lift.co/productlines**.
2. Check the air pressure before driving.

⚠ WARNING

BEFORE SERVICING THE VEHICLE, MAKE SURE TO TURN OFF “RISE ON START” AND “PRESET MAINTAIN.” THIS WILL ELIMINATE ANY UNINTENDED SUSPENSION CYCLING IF YOU NEED TO TURN THE KEY ON IN THE VEHICLE FOR ANY REASON.

TUNING THE AIR PRESSURE.

Pressure determination comes down to three things — level vehicle, ride comfort and stability.

1. **Level vehicle**

   Depending on load, it is possible one side will need more pressure than the other to level the vehicle.

2. **Ride comfort**

   If the vehicle has a harsh ride, it may be due to either too much pressure or not enough causing frequent bottoming. Also, riding the vehicle at the top, or close to the top of the available stroke will cause an uncomfortable ride due to a lack of rebound travel. This situation should be avoided for driving any significant distance. Try different pressures to determine the best ride comfort. See the Air Lift suggested driving air pressure for this vehicle (Table 2).

3. **Stability**

   Stability translates into safety and should be the priority, meaning the driver may need to sacrifice a perfectly level and comfortable ride. Stability issues include roll control, bounce, dive during braking and sponginess. Tuning out these problems usually requires additional air pressure, damping or both.

Troubleshooting Guide

PROBLEM	CAUSE	SOLUTION
Air spring won't maintain pressure.	Leak at fitting, air line not cut properly or damage to air line during installation.	Find location of leak by spraying listed components with soapy water solution and look for bubbles. Tighten air fitting, re-cut air line or replace damaged components.
	Leak at lower O-ring on damper if air spring is over the damper.	Spray bottom of air spring with soapy water solution and look for bubbles. Contact Air Lift customer service at **(800) 248-0892** to determine if component should be replaced.
Knocking noise when hitting bumps.	Loose suspension component such as locking collar on damper.	Tighten lower locking collar with significant force, check and tighten suspension components to factory specs at desired ride height.
	Driving vehicle too close to maximum extension.	Check current ride height and compare to maximum height. If there is less than 1" (25mm) difference, reduce air pressure to lower ride height.
		Lengthen strut or shock to increase available up travel.
Suspension bottoms out.	Air pressure is too low, causing air springs to bottom out.	Raise air pressure.
The ride is too bouncy.	Air pressure is too high, causing air springs to be too stiff.	Lower air pressure and adjust damper length if necessary to achieve proper ride height.
	Damping is inadequate.	Increase damping with adjusters.
The ride is too soft or floaty.	Damping is inadequate.	
The ride is too harsh.	Excessive damping.	Reduce damping with adjusters.

TIPS FOR INSTALLING AIR LINES

When cutting air lines, use a sharp knife or a hose cutter and make clean, square cuts (Fig. 11). Do not use scissors or wire cutters because these tools will deform the air line, causing it to leak around fittings. Do not cut the lines at an angle.

Do not bend the 1/4" hose at a radius of less than 1" and do not put side load pressure on fitting. The hose should be straight beyond the fitting for 1" before bending.

Inspect hose for scratches that run lengthwise on hose prior to installation. Contact Air Lift customer service at **(800) 248-0892** if the air line is damaged.

To watch a video demonstrating proper air line cutting, go to air-lift.co/cuttingairline

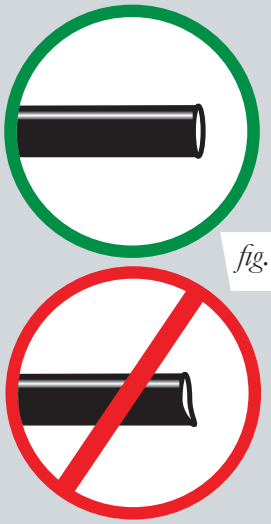

fig. 11

CHECKING FOR LEAKS

1. Inflate the air spring to at least 80 PSI.
2. Spray all connections with a solution of 1/5 liquid dish soap and 4/5 water. Spot leaks easily by looking for bubbles in the soapy water.
4. Check the air pressure again after 24 hours. A 2-4 PSI loss after initial installation is normal. Retest for leaks if the loss is more than 5 PSI.

FIXING LEAKS

1. **Air line to PTC fitting**: Try pushing the air line firmly into the fitting to ensure it is properly seated. If leak persists, deflate the spring and remove the air line by pushing the collar toward the fitting body and pulling firmly on the air line. Trim 1" off the end of the air line making sure the cut is clean and square. Reinsert air line firmly into fitting and pull back on the air line to make sure it is seated.
2. **Threaded connection**: If possible, tighten the fitting another half turn. If the leak persists, deflate spring, remove fitting and re-coat threads with thread sealant. Reinstall to hand tight and then use wrench to finish tightening an additional 1 3/4 turns.
3. **Air spring O-ring seal**: If a leak is found at the upper or lower air spring seal on a strut or shock, contact Air Lift customer service at **(800) 248-0892.**

Drilling Template

⚠ CAUTION

IMPORTANT: PRINT THIS MANUAL AT 100% SCALE. THIS MANUAL CONTAINS A DRILLING TEMPLATE, WHICH WOULD BE RENDERED INCORRECT IN DIMENSION IF PRINTED WITH ANY SCALING. USING AN INCORRECT TEMPLATE TO DRILL HOLES MAY CAUSE DAMAGE TO THE VEHICLE!

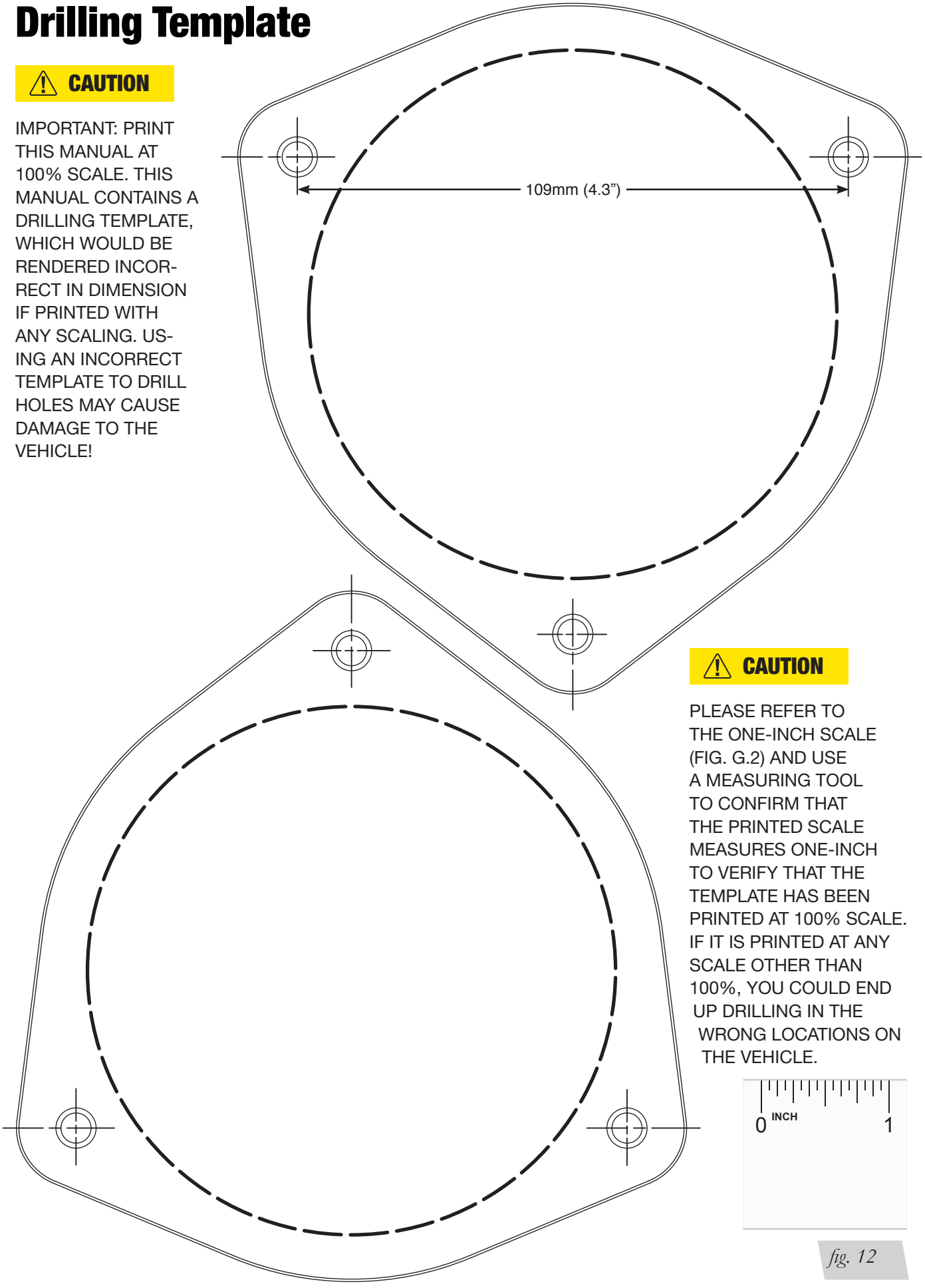

⚠ CAUTION

PLEASE REFER TO THE ONE-INCH SCALE (FIG. G.2) AND USE A MEASURING TOOL TO CONFIRM THAT THE PRINTED SCALE MEASURES ONE-INCH TO VERIFY THAT THE TEMPLATE HAS BEEN PRINTED AT 100% SCALE. IF IT IS PRINTED AT ANY SCALE OTHER THAN 100%, YOU COULD END UP DRILLING IN THE WRONG LOCATIONS ON THE VEHICLE.

fig. 12

Notes

Limited Warranty and Return Policy

WHAT THIS WARRANTY COVERS

Air Lift Company warrants to the original purchaser for a period of one year from the date of original purchase that the Air Lift Performance damper kits will be free from defects in workmanship and materials for the normal expected life of the part when used on cars and trucks as specified by Air Lift Company and under normal operating conditions, subject to the requirements and exclusions set forth below.

WHAT THIS WARRANTY DOES NOT COVER

The warranty does not apply to products that have been improperly applied, improperly installed, or which have not been maintained in accordance with installation instructions furnished with all products. This warranty does not apply and is void if damage or failure is caused by: accident, abuse, misuse (including but not limited to racing or off-road activities or commercial use), abnormal use, faulty installation, liquid contact, fire, earthquake or other external cause; operating the product outside Air Lift Company's instructions, specifications or guidelines; or service, alteration, maintenance or repairs performed by anyone other than Air Lift Company to the product from its purchased condition. This warranty also does not apply to: Universal Air (Fabricator Kits), consumable parts, such as batteries; cosmetic damage, including but not limited to scratches or dents; defects caused by normal wear and tear or otherwise due to the normal aging of the product, or if any serial or identification number has been removed or defaced from the product. Air Lift Company reserves the right to change the design of any product without assuming any obligation to modify any product previously manufactured.

LIMITATION OF LIABILITY

To the extent permitted by law, this warranty and the remedies set forth herein are exclusive and in lieu of all other warranties, remedies and conditions, whether oral, written, statutory, express or implied. AIR LIFT COMPANY DISCLAIMS ALL STATUTORY AND IMPLIED WARRANTIES, INCLUDING WITHOUT LIMITATION, WARRANTIES OF MERCHANTABILITY AND FITNESS FOR A PARTICULAR PURPOSE AND WARRANTIES AGAINST HIDDEN OR LATENT DEFECTS TO THE EXTENT PERMITTED BY LAW. To the extent such warranties cannot be disclaimed, such implied warranties shall apply only for the warranty period specified above. Please note that some states do not allow limitation on how long an implied warranty (or condition) lasts. So the above limitation may not apply to you.

Except as provided in this warranty and to the extent permitted by law, Air Lift Company shall not be liable for any direct, special, incidental or consequential damages resulting from any breach of warranty or condition, or arising in connection with the sale, use or repair of air lift products, or under any other legal theory, including but not limited to loss of use, loss of revenue, loss of actual or anticipated profits, loss of the use of money, loss of business, loss of opportunity, loss of goodwill, and loss of reputation. Air Lift Company's maximum liability shall not in any case exceed the purchase price paid by you for the Air Lift product. Please note that some states do not allow the exclusion or limitation of incidental or consequential damages, so the above limitation or exclusion may not apply to you.

HOW TO GET SERVICE

If a defect in workmanship or materials causes your Air Lift Performance product to become inoperable within the warranty period, before returning any defective product, call Air Lift Company at (800) 248-0892 in the U.S. and Canada (elsewhere, (517) 322-2144) to obtain a Returned Materials Authorization (RMA) number. The consumer shall be responsible for removing (labor charges) the defective product from the vehicle and returning it, shipping costs prepaid, to Air Lift Company for verification. Returns to Air Lift Company must be postage prepaid and sent to: Air Lift Company • 2727 Snow Road • Lansing, MI • 48917. You must prove to the satisfaction of Air Lift Company the date of original purchase of your Air Lift Performance product. You must also enclose the RMA number and a return address. A minimum $10 shipping and handling charge will apply to all warranty claims. You must also pack the product to minimize the risk of it being damaged in transit. If we receive a product in damaged condition as the result of shipping, we will notify you and you must seek a claim with the shipper.

WHAT AIR LIFT COMPANY WILL DO

If you submit a valid claim to Air Lift Company during the warranty period, Air Lift Company will, at its option, repair your Air Lift Performance product or furnish you with a new or rebuilt product. Air Lift Company will not reimburse you for repairs or replacement parts provided by other parties. Your repaired or replacement Air Lift Performance product will be returned to you (subject to payment of the required warranty claim shipping and handling charge) and it will be covered under the warranty for the balance of the warranty period, if any. When a product or part is replaced, any replacement item becomes your property and the replaced item becomes property of Air Lift Company. You are responsible for installation/reinstallation (labor charges) of the product.

HOW THE LAW RELATES TO THIS WARRANTY

This warranty gives you specific legal rights and you may also have other rights which vary from state to state. By this warranty, Air Lift Company does not limit or exclude your rights except as allowed by law. To fully understand your rights, you should consult the laws of your state.

Replacement Part Information

If replacement parts are needed, contact the local dealer or call Air Lift customer service at **(800) 248-0892**. Most parts are immediately available and can be shipped the same day.

Contact Air Lift Company customer service at (800) 248-0892 first if:

- Parts are missing from the kit.
- Need technical assistance on installation or operation.
- Broken or defective parts in the kit.
- Wrong parts in the kit.
- Have a warranty claim or question.

Contact the retailer where the kit was purchased:

- If it is necessary to return or exchange the kit for any reason.
- If there is a problem with shipping if shipped from the retailer.
- If there is a problem with the price.

Contact Information

Mailing address	P.O. Box 80167 Lansing, MI 48908-0167
Shipping address for returns	2727 Snow Road Lansing, MI 48917
Phone	Toll free: (800) 248-0892 International: (517) 322-2144
Email	service@airliftcompany.com
Web address	www.airliftcompany.com

Need Help?

Contact Air Lift Company customer service department by calling (800) 248-0892. For calls from outside the USA or Canada, dial (517) 322-2144.

Connect by searching for **Air Lift Performance** *#LifeonAir*

Thank you for purchasing Air Lift Performance products!

Air Lift Performance • 2727 Snow Road • Lansing, MI 48917 or P.O. Box 80167 • Lansing, MI 48908-0167
Toll Free (800) 248-0892 • Local (517) 322-2144 • Fax (517) 322-0240 • www.airliftperformance.com

Printed in the USA
BGL-0816

Kit 75619

VW MKIV R32
Audi TT MKI Quattro

Rear Application

INSTALLATION GUIDE

For maximum effectiveness and safety, please read these instructions completely before proceeding with installation.

Failure to read these instructions can result in an incorrect installation.

MN-775 • (011110) • ERN 7180

TABLE OF CONTENTS

Introduction 2
Notation Explanation 2
Important Safety Notices 2

Installation Diagram 3
Hardware List 3
Tools List 3

Installing the Air Suspension 4
Preparing the vehicle 4
Installing the air spring 10
Tips for routing the air line 14
Aligning the vehicle 16

Before Operating 17
Installation Checklist 17
Post-installation checklist 17

Product Use, Maintenance and Servicing 18
Suggested Driving Air Pressure and Maximum Air Pressure 18
Maintenance Guidelines 18
Troubleshooting Guide 18
Frequently Asked Questions 18
Tuning the Air Pressure 19
Checking for Leaks 19
Fixing Leaks 19

Limited Warranty and Return Policy 20

Replacement Information 20

Contact Information 20

Introduction

The purpose of this publication is to assist with the installation, maintenance and troubleshooting of this Volkswagen MKIV R32 and Audi TT MKI Quattro Performance kit.

It is important to read and understand the entire installation guide before beginning installation or performing any maintenance, service or repair. The information includes a hardware list, tool list, step-by-step installation information, maintenance tips, safety information and a troubleshooting guide.

Air Lift Company reserves the right to make changes and improvements to its products and publications at any time. For the latest version of this manual, contact Air Lift Company at (800) 248-0892 or visit our website at www.airliftcompany.com.

NOTATION EXPLANATION

Hazard notations appear in various locations in this publication. Information which is highlighted by one of these notations must be observed to help minimize risk of personal injury or possible improper installation which may render the vehicle unsafe. Notes are used to help emphasize areas of procedural importance and provide helpful suggestions. The following definitions explain the use of these notations as they appear throughout this guide.

⚠ DANGER INDICATES IMMEDIATE HAZARDS WHICH WILL RESULT IN SEVERE PERSONAL INJURY OR DEATH.

⚠ WARNING INDICATES HAZARDS OR UNSAFE PRACTICES WHICH COULD RESULT IN SEVERE PERSONAL INJURY OR DEATH.

⚠ CAUTION INDICATES HAZARDS OR UNSAFE PRACTICES WHICH COULD RESULT IN DAMAGE TO THE MACHINE OR MINOR PERSONAL INJURY.

NOTE *Indicates a procedure, practice or hint which is important to highlight.*

IMPORTANT SAFETY NOTICES

The installation of this kit does not alter the Gross Vehicle Weight Rating (GVWR) or payload of the vehicle. Check your vehicle's owner's manual and do not exceed the maximum load listed for your vehicle.

Gross Vehicle Weight Rating: The maximum allowable weight of the fully loaded vehicle (including passengers and cargo). This number — along with other weight limits, as well as tire, rim size and inflation pressure data — is shown on the vehicle's Safety Compliance Certification Label.

Payload: The combined, maximum allowable weight of cargo and passengers that the vehicle is designed to carry. Payload is GVWR minus the Base Curb Weight.

⚠ WARNING DO NOT INFLATE AIR SPRINGS WHILE OFF OF THE VEHICLE. DAMAGE TO ASSEMBLY MAY RESULT AND VOID WARRANTY.

⚠ CAUTION DO NOT WELD TO, OR MODIFY LIFESTYLE STRUTS/SHOCKS IN ANY WAY. DAMAGE TO UNIT MAY OCCUR AND WILL VOID WARRANTY.

Installation Diagram

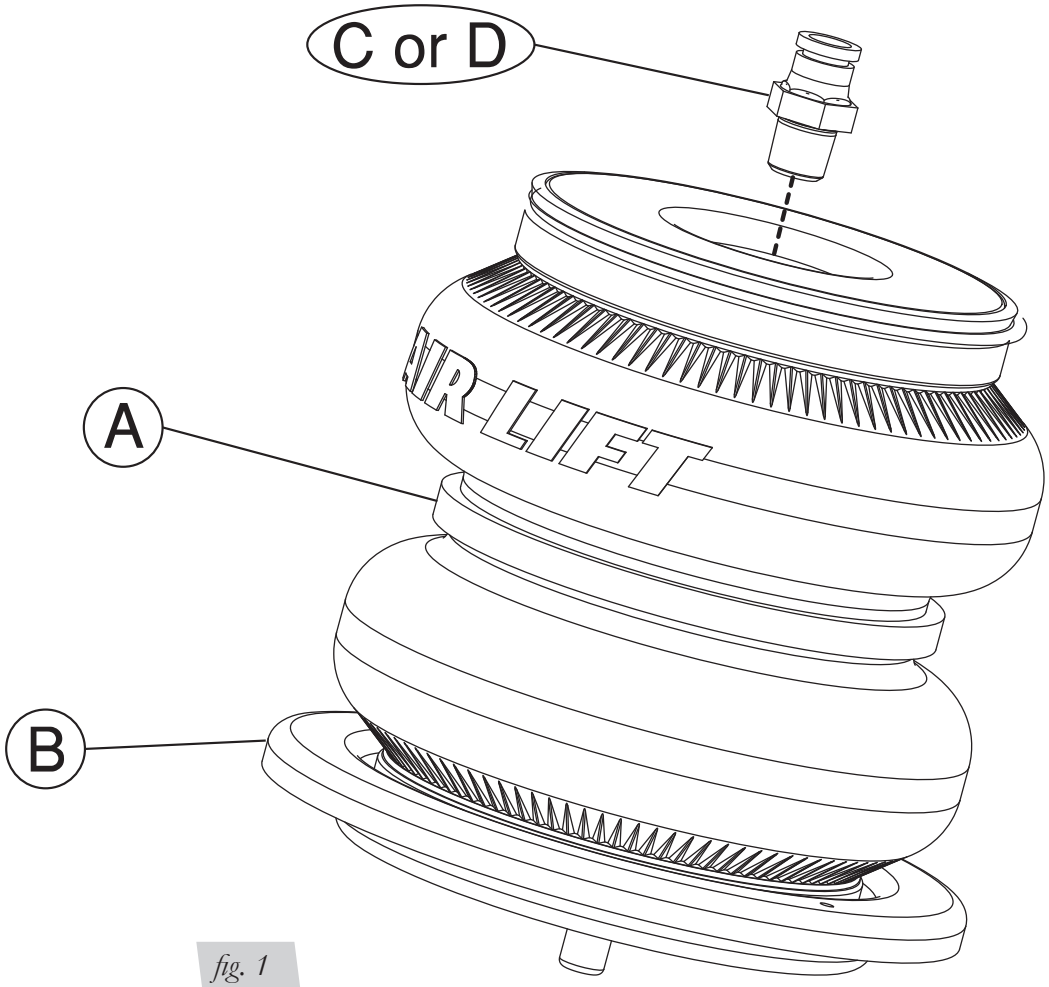

fig. 1

HARDWARE LIST

Item	Part #	Description ..... Qty
A	58527	Air spring.....2
B	11928	Roll plate.....2
C	21745	Connector, 1/4” MNPT x 1/4” PTC.....2
D	21853	Connector, 1/4” MNPT x 3/8” PTC.....2

TOOLS LIST

Description
Jack
Jack stands or hoist
Stepped drill bit
Drill
Metal cutting saw
Metric wrenches
Torque wrench

STOP! Missing or damaged parts? Call Air Lift customer service at (800) 248-0892 for a replacement part.

Installing the Air Suspension

PREPARING THE VEHICLE

1. Elevate the vehicle and support the body with a hoist or jack stands. Trailing link must be free to move.

2. Remove the rear wheels.

NOTE

If the vehicle is equipped with Auto-Leveling Headlight Control, detach the linkage from the lower control arm to prevent overextension (Fig. 2).

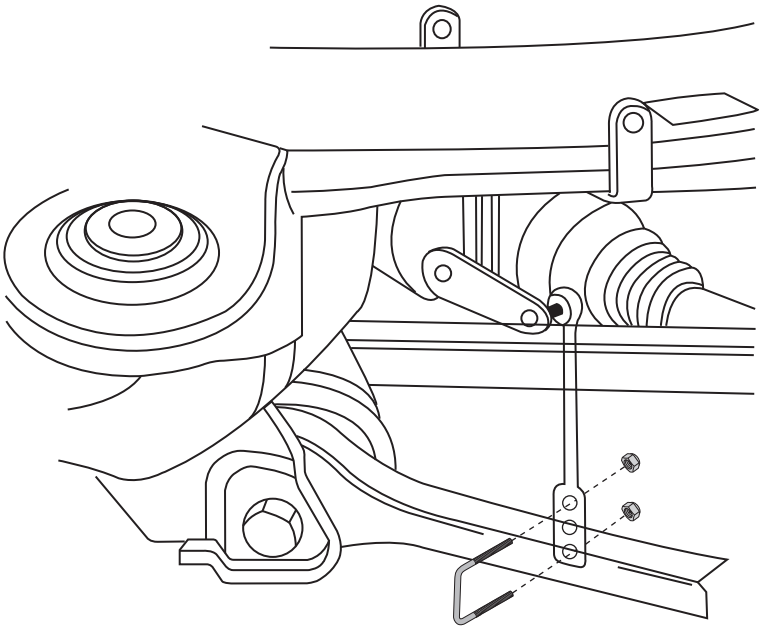

fig. 2

3. The recommended method for removal of the coil spring is with a spring compressor.

⚠ CAUTION

COIL SPRING UNDER COMPRESSION.

a. The coil spring can be removed by securely supporting the axle with a jack and removing the lower shock mounting bolt (Fig. 3). Slowly lower the axle until the axle hangs free. Now the coil spring is free from tension and can be removed (Fig. 4).

fig. 3

fig. 4

4. Remove the coil spring isolators from the top and bottom (Fig. 5).

fig. 5

5. Detach the ABS sensor wire from the lower control arm (Figs. 6 and 7).

fig. 6

fig. 7

6. Unclip the brake line from the two plastic clips attached to the chassis before the trailing arm. One of the clips is beside the gas tank and the other is in front of the gas tank (Figs. 8 and 9).

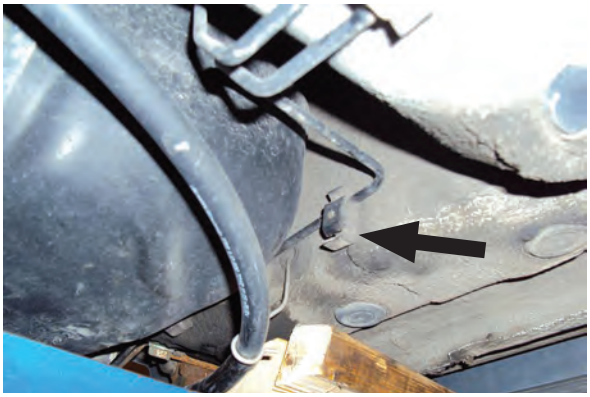

fig. 8

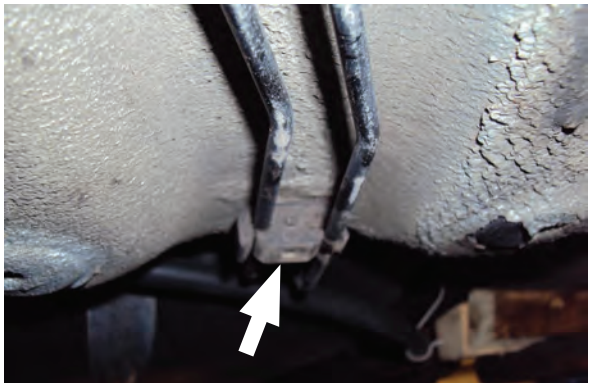

fig. 9

7. Support the trailing arm and unbolt the four bolts that attach to the chassis (Figs. 10 and 11). Slowly lower the trailing arm (Fig. 12) and move the brake line away from the attaching clips to prevent kinking (Fig. 13).

fig. 10

fig. 11

fig. 12

fig. 13

8. Working at the upper coil spring perch: measure 15mm (.59”) from the bottom of the nipple and mark a clear line (Figs. 14 and 15). Cut across the marked line removing the 15mm of nipple then de-burr (Figs. 16 and 17).

fig. 14

fig. 15

fig. 16

fig. 17

9. Center punch and drill a pilot hole through the center of the nipple (Figs. 18, 19 and 20).

fig. 18

fig. 19

fig. 20

10. Using a stepped drill bit, drill large access holes for the air line to run through (Fig. 21). Make certain the hole is large enough to allow the air line to radius around into the chassis channel without kinking or abrading the air line (Fig. 22).

fig. 21

fig. 22

11. Place the recessed portion of the air spring over the spring perch nipple and verify the air spring will seat flush with the spring perch flats.

INSTALLING THE AIR SPRING

1. Apply Teflon tape or thread sealant to the threads of the air fitting. Thread fitting into the upper air spring end cap hand tight (Fig. 23). Torque 1 and 3/4 turns beyond hand tight.

fig. 23

2. Within the trunk, remove the carpeted flooring and the soft plugs will be revealed next to the side walls. Remove the soft plugs and the air line access hole drilled in step 10 can be seen within the chassis channel (Fig. 24). Route the air line through the access hole and into the trunk (Figs. 25, 26, 27, 28, 29 and 30.

TIP: *Using a guide wire though the trunk to the access hole created will make routing the air line easier (Fig. 25).*

fig. 24

fig. 25

fig. 26

fig. 27

fig. 28

fig. 29

fig. 30

3. Lift the trailing arm and reattach the four previously removed bolts that attach the trailing link to the chassis (Figs. 31 and 32). Reattach the brake lines and ABS sensor wire (Figs. 33, 34 and 35).

fig. 31

fig. 32

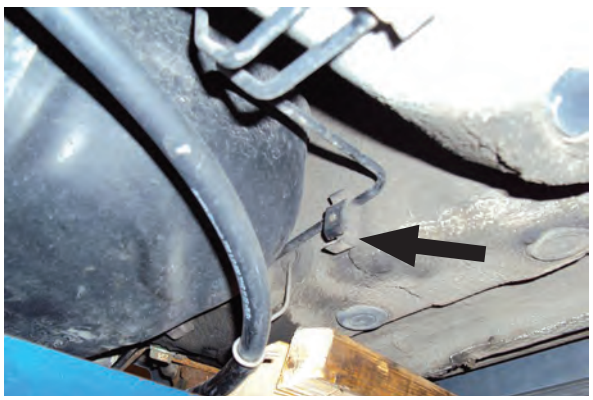

fig. 33

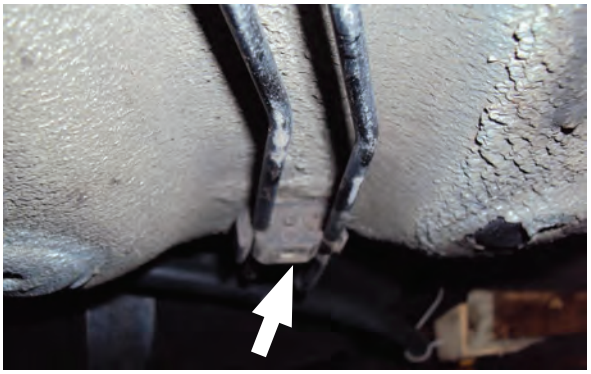

fig. 34

fig. 35

4. Insert the air supply line into the air fitting (Fig. 36). Collapse the air spring and nest the air spring upper end cap around the upper coil spring perch (Fig. 37). Locate the air spring lower end cap pin into the trailing link hole (Fig. 37).

fig. 36

fig. 37

5. Reinstall the lower end-link/shock-eye bolt (Fig. 38). Do not torque at this time. (Torquing of this and all bushing bolts should be done at the new desired ride height)

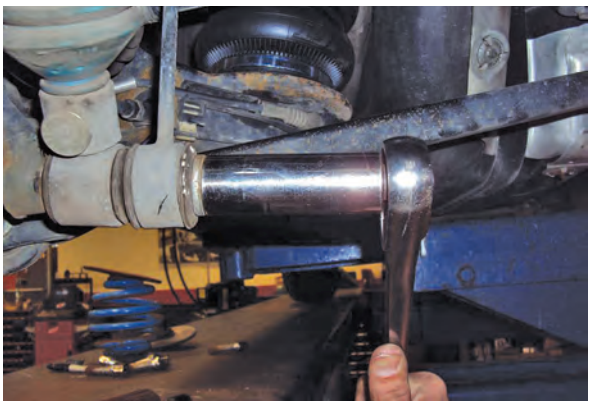

fig. 38

6. Reinstall the wheels.

ROUTING THE AIR LINE TIPS

1. Remove the luggage compartment trim cover and side trim (Figs. 39 and 40). (R32 shown)

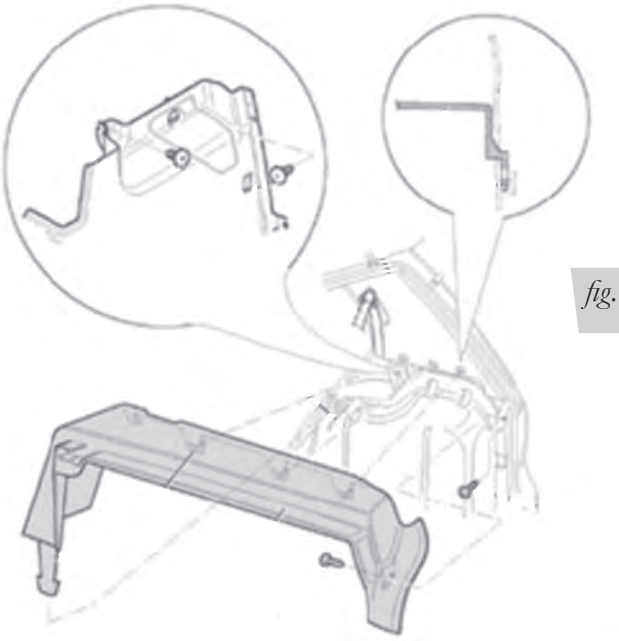

fig. 39

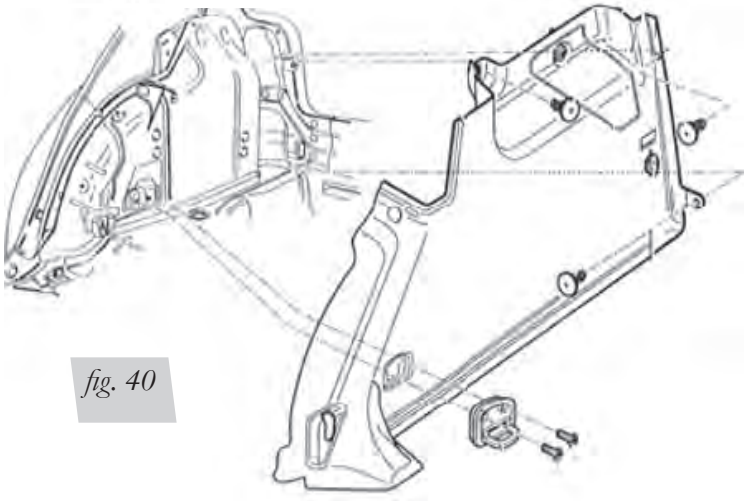

fig. 40

2. Two options for routing (Figs. 41 and 42):

   a. Drill a 1/2” or larger hole against the wheel housing. Cut a straight line from the soft plug hole over to the newly drilled hole. Fold the metal between the two holes along the cut line. Slide the air line over to the new hole against the wheel housing. Fold the metal back down flat. Apply grommet material around the hole. Reinstall the soft plug.

   B. Grind material away from the soft plug hole to the wheel housing. Apply grommet material around the sharp edges. Move the air line over to the wheel housing and reinstall the soft plug.

fig. 41

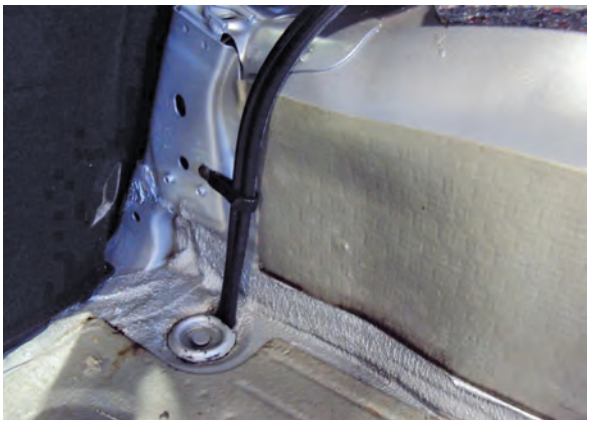

fig. 42

3. Decide where the control system will be located and route the remaining air line accordingly.

4. With the air line against the wheel housing, reinstall the luggage compartment trim.

5. Voila! Rejoice in a job well done!!

ALIGNING THE VEHICLE

1. Using the control system, set the vehicle height to the new custom ride height.

2. If the custom ride height is lower than stock, we recommend loosening all pivot points (bolts, nuts) on any control arm, strut arm or radius rod that contains bushings. Once they have been loosened, re-torque to stock specifications.

NOTE

It may be necessary to cycle the suspension to loosen the bushing up from its mount. This will help unload the bushing to make it last longer at its new position based on the custom ride height.

Torque Specifications		
Location	Nm	ft. lbs.
Upper transverse link bolts/nuts	70 +90˚	51.6 +90˚
Lower transverse link bolts/nuts	70 +90˚	51.6 +90˚
Rear axle bearing bracket (front trailing arm bushing)	90	66.4
Trailing arm bracket to chassis bolts	75	55.3
Upper shock eye bolt	60	44.2
Lower shock eye/end link bolt	110	81
Wheel fastener	120	88.5
Auto-leveling headlight linkage nut	5	3.7 (44.5 lbs.-in.)

Table 1

Before Operating

⚠ CAUTION MAKE SURE THE FRONT WHEELS ARE STRAIGHT WHEN DEFLATING AND REINFLATING AIR BAGS.

1. Inflate and deflate the system (do not exceed 125 PSI) to check for clearance or binding issues. With the air springs deflated, check clearances on everything so as not to pinch brake lines, vent tubes, etc. Clear lines if necessary.
2. Inflate the air springs to 75-90 PSI and check all connections for leaks.
3. An Air Lift Air Management System such as 3H/3P is highly recommended for this product.
4. Please familiarize yourself further with this product by reading the Product Use, Maintenance and Servicing section.

INSTALLATION CHECKLIST

- ❑ Clearance test — Inflate the air springs to 75-90 PSI and make sure there is at least 1/2" clearance from anything that might rub against each air spring. Be sure to check the clearance at ride height and after vehicle alignment.
- ❑ Leak test before road test — Inflate the air springs to 75-90 PSI and check all connections for leaks. All leaks must be eliminated before the vehicle is road tested.
- ❑ Heat test — Be sure there is sufficient clearance from heat sources, at least 6" for air springs and air lines. If a heat shield was included in the kit, install it. If there is no heat shield, but one is required, call Air Lift customer service at (800) 248-0892.
- ❑ Fastener test — Recheck all bolts for proper torque.
- ❑ Road test — The vehicle should be road tested after the preceding tests. Inflate the springs to recommended driving pressures. Drive the vehicle 10 miles and recheck for clearance, loose fasteners and air leaks.
- ❑ Operating instructions — If professionally installed, the installer should review the operating instructions with the owner. Be sure to provide the owner with all of the paperwork that came with the kit.

Technician's Signature _____

Date _____

POST-INSTALLATION CHECKLIST

- ❑ Overnight leak down test — Recheck air pressure after the vehicle has been used for 24 hours. If the pressure has dropped more than 5 PSI, then there is a leak that must be fixed. Either fix the leak yourself or return to the installer for service.
- ❑ Air pressure requirements — Regardless of load, the air pressure should always be adjusted to maintain adequate ride height at all times while driving.
- ❑ Thirty day or 500 mile test — Recheck the air spring system after 30 days or 500 miles, whichever comes first. If any part shows signs of rubbing or abrasion, it must be remedied immediately! Please consult installation manual and re-check your installation. Rubbing of any kind will cause failure and will not be covered under warranty. If professionally installed, the installer should be consulted. Check all fasteners for tightness.

Product Use, Maintenance and Servicing

Suggested Driving Air Pressure	Maximum Air Pressure
40-60 PSI	125 PSI
FAILURE TO MAINTAIN ADEQUATE MINIMUM PRESSURE (OR PRESSURE PROPORTIONAL TO LOAD) WILL RESULT IN BOTTOMING OUT, OVER-EXTENSION OR RUBBING AGAINST ANOTHER COMPONENT AND WILL **VOID THE WARRANTY**.	

MAINTENANCE GUIDELINES

NOTE *By following these steps, vehicle owners will obtain the longest life and best results from their air spring.*

1. Check the air pressure before driving.
2. Never inflate beyond 125 PSI.
3. If you develop an air leak in the system, use a soapy water solution to check all air line connections, before deflating and removing the spring.
4. When increasing load, always adjust the air pressure to maintain normal ride height. Increase or decrease pressure from the system as necessary to attain normal ride height for optimal ride and handling. Remember that loads carried behind the axle (including tongue loads) require more leveling force (pressure) than those carried directly over the axle.

⚠ CAUTION FOR YOUR SAFETY AND TO PREVENT DAMAGE TO YOUR VEHICLE, DO NOT EXCEED MAXIMUM GROSS VEHICLE WEIGHT RATING (GVWR), AS INDICATED BY THE VEHICLE MANUFACTURER. ALTHOUGH YOUR AIR SPRINGS ARE RATED AT A MAXIMUM INFLATION PRESSURE OF 125 PSI, THE AIR PRESSURE ACTUALLY NEEDED IS DEPENDENT ON YOUR LOAD.

5. Always add air to the springs in small quantities, checking the pressure frequently. Sleeves require less air volume than a tire and inflate quickly.
6. Should it become necessary to raise the vehicle by the frame, make sure the control system is turned off before lifting.

TROUBLESHOOTING GUIDE

1. Leak test the air line connections, the threaded connection into the air spring, and all fittings in the control system.
2. Inspect the air lines to be sure none are pinched. Tie straps may be too tight. Loosen or replace the strap and replace leaking components.
3. Inspect the air line for holes and cracks. Replace as needed.
4. Look for a kink or fold in the air line. Reroute as needed.

If the preceding steps do not solve the problem, it is possibly caused by a failed air spring — either a factory defect or an operating problem. Please call Air Lift at (800) 248-0892 for assistance.

FREQUENTLY ASKED QUESTIONS

Q. Will installing air springs increase the weight ratings of a vehicle?
No. Adding air springs will not change the weight ratings (GAWR, GCWR and/or GVWR) of a vehicle. Exceeding the GVWR is dangerous and voids the Air Lift warranty.

Q. How long should air springs last?
If the air springs are properly installed and maintained they can last indefinitely.

Q. Will raising the vehicle on a hoist for service work damage the air springs?
No. The vehicle can be lifted on a hoist safely. If equipped with a digital control system, it is recommended that the system be put in “manual mode” before lifting so the system does not try and adjust while on the hoist.

TUNING THE AIR PRESSURE

Pressure determination comes down to three things — level vehicle, ride comfort, and stability.

1. **Level vehicle**

   If the vehicle's headlights are shining into the trees or the vehicle is leaning to one side, then it is not level. Raise the air pressure to correct either of these problems and level the vehicle.

2. **Ride comfort**

   If the vehicle has a rough or harsh ride it may be due to either too much pressure or not enough. Try different pressures to determine the best ride comfort. See Air Lift suggested driving air pressure.

3. **Stability**

   Stability translates into safety and should be the priority, meaning the driver may need to sacrifice a perfectly level and comfortable ride. Stability issues include roll control, bounce, dive during braking and sponginess. Tuning out these problems usually requires additional air pressure, strut damping, or both.

CHECKING FOR LEAKS

1. Inflate the air spring to 80 PSI.
2. Spray all connections and the inflation valves with a solution of 1/5 liquid dish soap and 4/5 water. Spot leaks easily by looking for bubbles in the soapy water.
3. After the test, deflate the springs to the minimum pressure required to restore the system to normal ride height.
4. Check the air pressure again after 24 hours. A 2-4 PSI loss after initial installation is normal. Retest for leaks if the loss is more than 5 PSI.

FIXING LEAKS

1. If there is a problem with a swivel fitting:
   a. Check the air line connection by deflating the spring and removing the line by pulling the collar against the fitting and pulling firmly on the air line. Trim 1" off the end of the air line. Be sure the cut is clean and square (see Fig. 43). Reinsert the air line into the push-to-connect fitting.
   b. Check the threaded connection by tightening the swivel fitting another 1/2 turn. If it still leaks, deflate the air spring, remove the fitting, and re-coat the threads with thread sealant. Reinstall by hand tightening as much as possible and then use a wrench for an additional two turns.
2. If the preceding steps have not resolved the problem, call Air Lift customer service at (800) 248-0892.

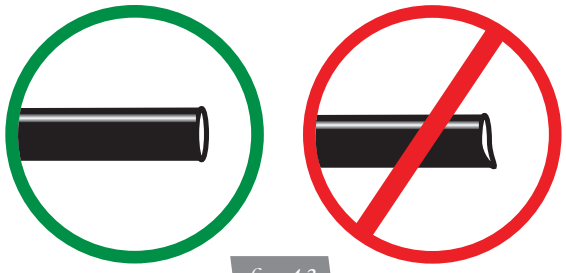

fig. 43

Limited Warranty and Return Policy

WHAT THIS WARRANTY COVERS

Air Lift Company provides a Limited Lifetime Warranty to the original purchaser of its Air Lift Performance 3H™ and 3P™ Control/Air Management Systems, that the Air Lift Performance products will be free from defects in workmanship and materials for the normal expected life of the part when used on cars and trucks as specified by Air Lift Company and under normal operating conditions, subject to the requirements and exclusions set forth below.

For all other Air Lift Performance products, Air Lift Company warrants to the original purchaser for a period of one year from the date of original purchase, that the Air Lift Performance products will be free from defects in workmanship and materials when used on cars and trucks as specified by Air Lift Company and under normal operating conditions, subject to the requirements and exclusions set forth below.

WHAT THIS WARRANTY DOES NOT COVER

The warranty does not apply to products that have been improperly applied, improperly installed or which have not been maintained in accordance with installation instructions furnished with all products. This warranty does not apply and is void if damage or failure is caused by: accident, abuse, misuse (including but not limited to racing or off-road activities or commercial use), abnormal use, faulty installation, liquid contact, fire, earthquake or other external cause; operating the product outside Air Lift Company's instructions, specifications or guidelines; or service, alteration, maintenance or repairs performed by anyone other than Air Lift Company to the product from its purchased condition. This warranty also does not apply to: Universal Air (Fabricator Kits), consumable parts, such as batteries; cosmetic damage, including but not limited to scratches or dents; defects caused by normal wear and tear or otherwise due to the normal aging of the product, or if any serial or identification number has been removed or defaced from the product. Air Lift Company reserves the right to change the design of any product without assuming any obligation to modify any product previously manufactured.

LIMITATION OF LIABILITY

To the extent permitted by law, this warranty and the remedies set forth herein are exclusive and in lieu of all other warranties, remedies and conditions, whether oral, written, statutory, express or implied. AIR LIFT COMPANY DISCLAIMS ALL STATUTORY AND IMPLIED WARRANTIES, INCLUDING WITHOUT LIMITATION, WARRANTIES OF MERCHANTABILITY AND FITNESS FOR A PARTICULAR PURPOSE AND WARRANTIES AGAINST HIDDEN OR LATENT DEFECTS TO THE EXTENT PERMITTED BY LAW. To the extent such warranties cannot be disclaimed, such implied warranties shall apply only for the warranty period specified above. Please note that some states do not allow limitation on how long an implied warranty (or condition) lasts. So the above limitation may not apply to you.

Except as provided in this warranty and to the extent permitted by law, Air Lift Company shall not be liable for any direct, special, incidental or consequential damages resulting from any breach of warranty or condition, or arising in connection with the sale, use or repair of Air Lift products, or under any other legal theory, including but not limited to loss of use, loss of revenue, loss of actual or anticipated profits, loss of the use of money, loss of business, loss of opportunity, loss of goodwill, and loss of reputation. Air Lift Company's maximum liability shall not in any case exceed the purchase price paid by you for the Air Lift product. Please note that some states do not allow the exclusion or limitation of incidental or consequential damages, so the above limitation or exclusion may not apply to you.

HOW TO GET SERVICE

If a defect in workmanship or materials causes your Air Lift Performance product to become inoperable within the warranty period, before returning any defective product, call Air Lift Company at (800) 248-0892 in the U.S. and Canada (elsewhere, (517) 322-2144) to obtain a Returned Materials Authorization (RMA) number. The consumer shall be responsible for removing (labor charges) the defective product from the vehicle and returning it, shipping costs prepaid, to Air Lift Company for verification. Returns to Air Lift Company must be postage prepaid and sent to: Air Lift Company • 2727 Snow Road • Lansing, MI • 48917. You must prove to the satisfaction of Air Lift Company the date of original purchase of your Air Lift Performance product. You must also enclose the RMA number and a return address. A minimum $10 shipping and handling charge will apply to all warranty claims. You must also pack the product to minimize the risk of it being damaged in transit. If we receive a product in damaged condition as the result of shipping, we will notify you and you must seek a claim with the shipper.

WHAT AIR LIFT COMPANY WILL DO

If you submit a valid claim to Air Lift Company during the warranty period, Air Lift Company will, at its option, repair your Air Lift Performance product or furnish you with a new or rebuilt product. Air Lift Company will not reimburse you for repairs or replacement parts provided by other parties. Your repaired or replacement Air Lift Performance product will be returned to you (subject to payment of the required warranty claim shipping and handling charge) and it will be covered under the warranty for the balance of the warranty period, if any. When a product or part is replaced, any replacement item becomes your property and the replaced item becomes property of Air Lift Company. You are responsible for installation/reinstallation (labor charges) of the product.

HOW THE LAW RELATES TO THIS WARRANTY

This warranty gives you specific legal rights and you may also have other rights which vary from state to state. By this warranty, Air Lift Company does not limit or exclude your rights except as allowed by law. To fully understand your rights, you should consult the laws of your state.

Replacement Information

If you need replacement parts, contact the local dealer or call Air Lift customer service at (800) 248-0892. Most parts are immediately available and can be shipped the same day.

Contact Air Lift Performance customer service at (800) 248-0892 first if:

- Parts are missing from the kit.
- Need technical assistance on installation or operation.
- Broken or defective parts in the kit.
- Wrong parts in the kit.
- Have a warranty claim or question.

Contact the retailer where the kit was purchased:

- If it is necessary to return or exchange the kit for any reason.
- If there is a problem with shipping if shipped from the retailer.
- If there is a problem with the price.

Contact Information

If you have any questions, comments or need technical assistance contact our customer service department by calling (800) 248-0892. For calls from outside the USA or Canada, our local number is (517) 322-2144. You may also contact customer service anytime by e-mail at techsupport@airliftperformance.com.

For inquiries by mail, our address is PO Box 80167, Lansing, MI 48908-0167. Our shipping address for returns is 2727 Snow Road, Lansing, MI 48917.

You may also contact our sales team anytime by e-mail at sales@airliftperformance.com or on the web at www.airliftperformance.com.

Need Help?

Contact our customer service department by calling (800) 248-0892. For calls from outside the USA or Canada, our local number is (517) 322-2144.

Thank you for purchasing Air Lift Performance products!

Air Lift Performance • 2727 Snow Road • Lansing, MI 48917 or PO Box 80167 • Lansing, MI 48908-0167
Toll Free (800) 248-0892 • Local (517) 322-2144 • Fax (517) 322-0240 • www.airliftperformance.com

Printed in the USA
JJC-0816