# Kit 78567

Lexus IS (XE30)

***Front Application***

# INSTALLATION GUIDE

For maximum effectiveness and safety, please read these instructions completely before proceeding with installation.

*Failure to read these instructions can result in an incorrect installation.*

MN-1067 • (011801) • ERN 8745

# TABLE OF CONTENTS


**A. Introduction . . . . . 2**
Notation Explanation . . . . . 2

**B. Important Safety Notices . . . . . 2**

**C. Installation Diagram . . . . . 3**
Hardware List . . . . . 3

**D. Installing the Air Suspension . . . . . 4**
Removing the Stock Suspension . . . . . 4
Installing the Air Suspension . . . . . 5
Routing Air Lines. . . . . 6

**E. Tips for Installing the Air Lines . . . . . 7**
Cutting Air Lines . . . . . 7
Push-to-Connect (PTC) Fittings . . . . . 7
Checking for Leaks. . . . . 7
Fixing Leaks . . . . . 7

**F. Before Operating . . . . . 8**
Setting the Ride Height. . . . . 8
Torque Specifications . . . . . 8
Suggested Driving Air Pressure and Maximum Air Pressure . . . . . 8
Check for Binding. . . . . 9
Damping Adjustment . . . . . 9
Aligning the Vehicle. . . . . 9
Adjusting Extended or Drop Height Using Lower Mount . . . . . 10
Installation Checklist. . . . . 11
Post-installation Checklist . . . . . 11

**G. Use, Maintenance and Servicing. . . . . 12**
Tuning the Air Pressure. . . . . 12
Troubleshooting Guide . . . . . 12

**Limited Warranty and Return Policy. . . . . 13**

**Replacement Part Information . . . . . 13**

**Contact Information . . . . . 13**

# A. Introduction

Air Lift Performance thanks you for purchasing the most complete, fully engineered high-performance air suspension made for the Lexus IS (XE30). Read these installation instructions to correctly and safely set up the vehicle for a #lifeonair.

Air Lift assumes that the installer has the mechanical knowledge and ability to work on vehicle suspension systems and has basic tools necessary to complete a suspension replacement project. Special tools needed to complete the installation are noted on the Installation Diagram page.

Air Lift reserves the right to make changes and improvements to its products and publications at any time. For the latest version of this manual, contact Air Lift Performance at **(800) 248-0892** or visit **www.airliftperformance.com**.

An Air Lift Performance air management system is highly recommended for this product. Learn more at **air-lift.co/productlines**.

## NOTATION EXPLANATION

Hazard notations appear in various locations in this publication. Information which is highlighted by one of these notations must be observed to help minimize risk of personal injury or possible improper installation which may render the vehicle unsafe. Notes are used to help emphasize areas of procedural importance and provide helpful suggestions. The following definitions explain the use of these notations as they appear throughout this guide.

**DANGER** — INDICATES IMMEDIATE HAZARDS WHICH WILL RESULT IN SEVERE PERSONAL INJURY OR DEATH.

**WARNING** — INDICATES HAZARDS OR UNSAFE PRACTICES WHICH COULD RESULT IN SEVERE PERSONAL INJURY OR DEATH.

**CAUTION** — INDICATES HAZARDS OR UNSAFE PRACTICES WHICH COULD RESULT IN DAMAGE TO THE VEHICLE OR MINOR PERSONAL INJURY.

**NOTE** — *Indicates a procedure, practice or hint which is important to highlight.*

# B. Important Safety Notices

**WARNING** — DO NOT INFLATE AIR SPRINGS WHILE OFF OF THE VEHICLE. DAMAGE TO ASSEMBLY MAY RESULT AND VOID WARRANTY.

**CAUTION** — DO NOT WELD TO OR MODIFY PERFORMANCE STRUTS/SHOCKS IN ANY WAY. DAMAGE TO UNIT MAY OCCUR AND WILL VOID WARRANTY.

**WARNING** — AFTER INSTALLATION, ENSURE ALL ORIGINAL EQUIPMENT VEHICLE SAFETY FEATURES ARE PROPERLY CALIBRATED BY A QUALIFIED TECHNICIAN. CHANGING VEHICLE HEIGHT MAY AFFECT FUNCTIONING OF SAFETY SENSORS AND CAMERAS.

# C. Installation Diagram

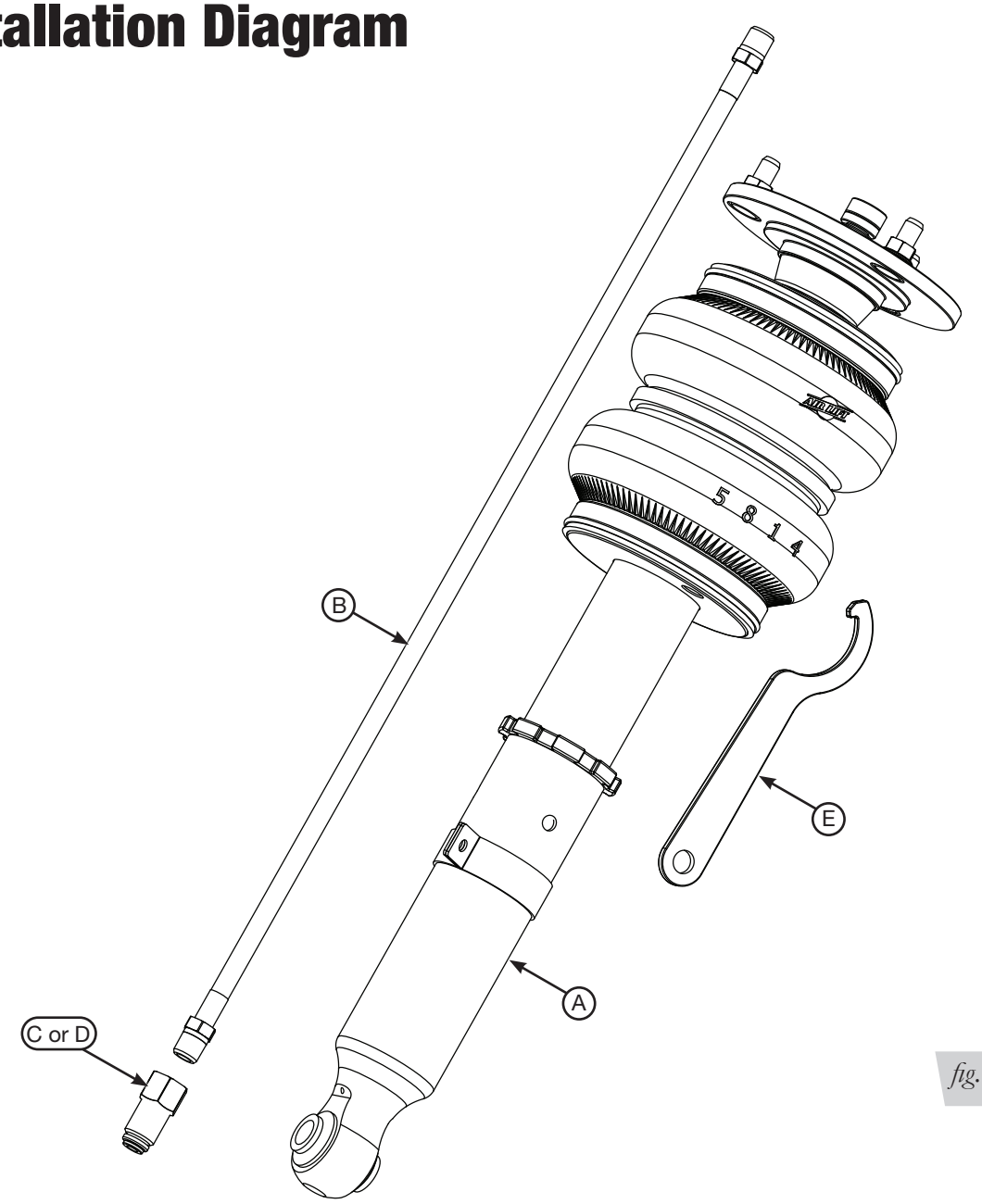


*fig. C.1*

## HARDWARE LIST

| Item | Part # | Description | Qty |
|---|---|---|---|
| A | 35425 | Front shock | 2 |
| B | 20997 | Leader line, 1/4” ID | 2 |
| C | 21810 | Union, 1/4” FNPT x 1/4” PTC | 2 |
| D | 21987 | Union, 1/4” FNPT x 3/8” PTC | 2 |
| E | | Spanner wrench | 1 |

STOP! Missing or damaged parts? Call Air Lift customer service at (800) 248-0892 for a replacement part.

# D. Installing the Air Suspension

**NOTE**

*See "Important Safety Notices" on page 2.*

## REMOVING THE STOCK SUSPENSION

**⚠ CAUTION**

USE JACK STANDS TO SUPPORT THE VEHICLE IF USING A JACK TO LIFT IT.

1. Disconnect the end link from the sway bar (Fig. D.1). Remove the brake line bracket from the shock.

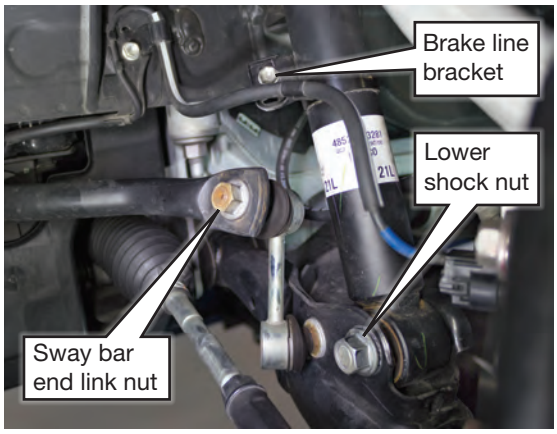


*fig. D.1*

2. With the hub supported, remove the lower shock bolt and nut (Fig. D.1).
3. Remove the cotter pin and castle nut from the steering knuckle (Fig. D.2). Disconnect the knuckle from the upper control arm.

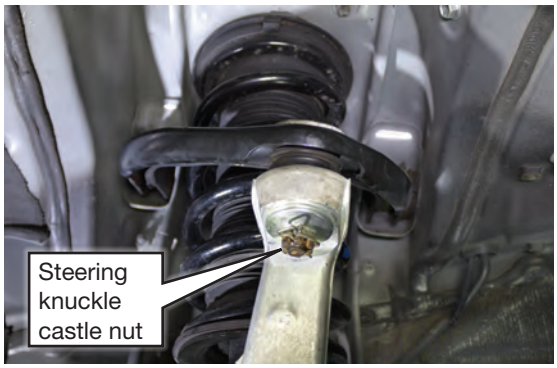


*fig. D.2*

4. Remove the upper mount nuts (Fig. D.3).

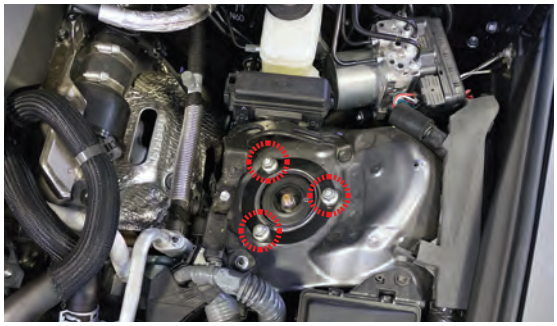

*fig. D.3*

5. Remove the shock from the car.

## INSTALLING THE AIR SUSPENSION

1. Begin by installing the leader line into the air spring. Tighten the appropriate fitting to the air line 1 3/4 turns beyond hand-tight. Tighten the leader line into the air spring 1 3/4 turns beyond hand-tight (Fig. D.4).

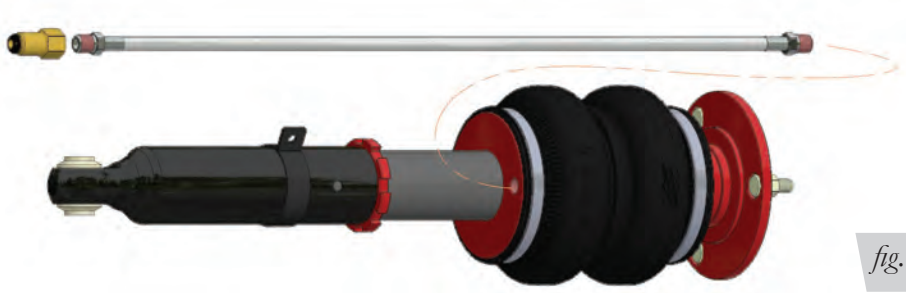

*fig. D.4*

2. Insert the shock assembly so that the leader line is oriented inboard and attach the upper mount to the chassis. Torque the nuts to 67Nm (49 lb.-ft.) (Fig. D.5).

*fig. D.5*

3. Use the jack to align the shock mount with the lower control arm attaching point. Insert the lower shock bolt from the rear of the shock. The nut has its own stopper. Do not rotate the nut against the control arm. Torque at ride height (Fig. D.6).

*fig. D.6*

4. Reconnect the steering knuckle to the upper control arm. Torque the castle nut to 87Nm (64 lb.-ft.). Reinsert the cotter pin (Fig. D.6).

5. Reconnect the sway bar end link. Torque to 84Nm (62 lb.-ft.) (Fig. D.7).

*fig. D.7*

6. Reattach the brake line bracket. Torque to 13.5Nm (120 lb.-in.) (Fig. D.7).

## ROUTING AIR LINES

1. Fully compress the suspension using a jack. With the suspension compressed, review the best routing for the leader line that is clear of all suspension and steering components.
2. Routing should allow for the suspension to extend and steer without kinking, pulling the line tight or rubbing on other components. Following the brake line routing is often a good place to start. Check clearances to all other components.

**⚠ WARNING**

AFTER INSTALLATION, ENSURE ALL ORIGINAL EQUIPMENT VEHICLE SAFETY FEATURES ARE PROPERLY CALIBRATED BY A QUALIFIED TECHNICIAN. CHANGING VEHICLE HEIGHT MAY AFFECT FUNCTIONING OF SAFETY SENSORS AND CAMERAS.

# E. Tips for Installing the Air Lines

## CUTTING AIR LINES

When cutting air lines, use a sharp knife or a hose cutter and make clean, square cuts (Fig. E.1). Do not use scissors or wire cutters because these tools will deform the air line, causing it to leak around fittings. Do not cut the lines at an angle.

The minimum bend radius for 1/4” air line is 1" (25mm). The minimum bend radius for 3/8” air line is 1 1/2” (38mm). Do not bend the air line less than the minimum bend radius or side load the fitting connections. Air lines are to be installed straight into fittings.

Inspect the air line for scratches that run lengthwise prior to installation. Contact Air Lift customer service at **(800) 248-0892** if the air line is damaged.

*fig. E.1*

To watch a video demonstrating proper air line cutting, go to **air-lift.co/cuttingairline**

## PUSH-TO-CONNECT (PTC) FITTINGS

Air lines should be pushed into the push-to-connect fittings firmly, with a slight side-to-side rotational twist. Check the connection by pulling on each line to verify a robust connection.

**NOTE**

*To release the air line from the connection (Fig. E.2), first release all air from the system. Push in on the air line (step 1), push the collar in (step 2), and with the collar depressed, pull the air line out of the fitting (step 3).*

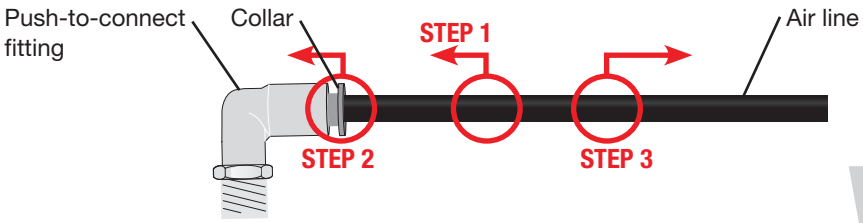


*fig. E.2*

## CHECKING FOR LEAKS

1. Inflate the air spring to 75-90 PSI (5.2-6.2BAR).
2. Spray all connections with a solution of liquid dish soap and water. Spot leaks easily by looking for bubbles in the soapy water.
3. After the test, deflate the springs to the minimum pressure required to restore the system to normal ride height.
4. Check the air pressure again after 24 hours. A 2-4 PSI (.14-.28BAR) loss after initial installation is normal. Retest for leaks if the loss is more than 5 PSI (.34BAR).

## FIXING LEAKS

1. If there is a problem with the push-to-connect fitting, remove the air line as described above. Trim 1” (25mm) off the end of the air line. Be sure the cut is clean and square (see Fig. E.1).
2. Reinsert the air line into the push-to-connect fitting as described above.

# F. Before Operating

## SETTING THE RIDE HEIGHT

1. With the suspension fully compressed, take a measurement from the fender to a chosen reference point – typically the center of the axle. Record this measurement as max compression (MC).
2. Cycle the suspension to max extension (ME) and record the measurement from the fender to the same reference point.
3. Add ME and MC, then divide the total by 2. Set the suspension to this point. This position will give 50% stroke in either direction and is a starting point for ride height (Fig. F.1).

| Formula for Calculating Ride Height |
|---|
| **(ME+MC)÷2=MID STROKE** |

*fig. F.1*

4. With the suspension at this position, loosen, then re-torque all suspension bushing pivot joint fasteners to the manufacturer's specifications (Table 1):

| Torque Specifications | | | |
|---|---|---|---|
| Location | Nm | Lb.-ft. | Lb.-in. |
| Sway bar end link nut | 84 | 62 | |
| Upper shock mount nuts | 67 | 49 | |
| Steering knuckle nut | 87 | 64 | |
| Brake line bracket | 13.5 | | 120 |
| Lower shock mount bolt to control arm | 180 | 133 | |
| Wheel studs | 103 | 76 | |
| Braided air lines/fittings | 1 3/4 turns beyond hand-tight | | |

*Table 1*

| Suggested Driving Air Pressure | Maximum Air Pressure |
|---|---|
| **55-75 PSI (3.8-5.2BAR)** | **125 PSI (8.6BAR)** |
| FAILURE TO MAINTAIN ADEQUATE MINIMUM PRESSURE (OR PRESSURE PROPORTIONAL TO LOAD) MAY RESULT IN EXCESSIVE BOTTOMING OUT AND **WILL VOID THE WARRANTY**. | |

*Table 2*

## CHECK FOR BINDING

1. Inflate and deflate the system (do not exceed 125 PSI [8.6BAR]) to check for clearance or binding issues. With the air springs deflated, check clearances on everything so as not to pinch brake lines, vent tubes, etc. Clear lines if necessary.
2. Inflate the air springs to 75-90 PSI (5.2-6.2BAR) and check all connections for leaks.

**⚠ CAUTION**

MAKE SURE THE FRONT WHEELS ARE STRAIGHT WHEN DEFLATING AND REINFLATING AIR SPRINGS.

## DAMPING ADJUSTMENT

Suspension damping is a matter of compromise. Setting it too stiff will make the ride feel jarring. In addition, if the suspension is too stiff, the tires will lose contact with the road, reducing control and power delivery. On the other hand, if the suspension is too soft, the car can experience brake dive and excessive bouncing. The sweet spot lies somewhere in the middle. Air Lift dampers have a range of adjustment, which allows the driver to tune the ride and handling to his or her preferences.

Air Lift recommends damper and air pressure settings for every vehicle kit, but it is impossible to consider every situation. For example, even though Air Lift kits replace the dampers and springs, vehicles with sport-tuned suspensions might have stiffer bushings, larger anti-roll bars, bigger wheels, wider tires, etc. These settings may need to be adjusted to different vehicles and driving characteristics.

1. The dampers in this kit have 30 settings, or “clicks,” of adjustable compression and rebound damping characteristics. Damping is changed through the damper rod using the supplied adjuster (Figs. F.2 & F.3) or a 3mm hex key (not included).
2. Turn the adjuster clockwise (H) and the damping settings are hardened, reducing oscillations and body motion. Turn the adjuster counterclockwise (S) and the damping is softened.
3. Each damper in this kit is preset to “-18 clicks.” This means that the damper is adjusted 18 clicks away from full stiff, which starts at 0. Counting up from full stiff is the preferred method of keeping track of, or setting, damping. This setting was developed on a 2016 Lexus IS 200t with stock suspension.

*fig. F.2*

*fig. F.3*

## ALIGNING THE VEHICLE

1. Set the vehicle to the height at which it will most often be driven.
2. If the ride height is lower than stock, Air Lift Performance recommends loosening all pivot points (bolts, nuts) on any control arm, strut arm or radius rod that contains bushings. Once they have been loosened, re-torque to stock specifications (Table 1).

**NOTE**

*It may be necessary to cycle the suspension to loosen the bushing from its mount. This will help re-orient the bushing at its new position based on the chosen ride height.*

3. Get a professional alignment of the vehicle at the new chosen ride height.

## ADJUSTING EXTENDED OR DROP HEIGHT USING LOWER MOUNT

These dampers have been preset at the factory to provide maximum drop height while maintaining adequate tire clearance to the air spring. If you wish to gain more extended height (lift), which is the same as reducing drop height, or want to lower the chassis further and there is still adjustment available at the lower mount, please use the following procedure:

1. Support the vehicle with jack stands or a hoist at approved lifting points.
2. Remove the wheel.
3. Using the supplied spanner wrench, loosen the locking collar (Fig. F.4).
4. Deflate the air spring to 0 pressure on the corner you are adjusting.
5. Disconnect lower mount from suspension.
6. Spin the lower mount to the desired location.

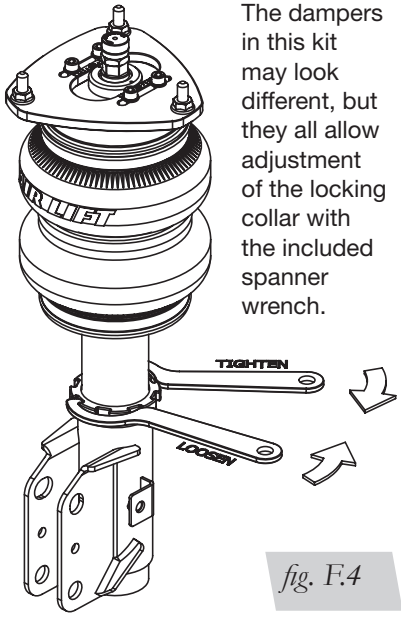


The dampers in this kit may look different, but they all allow adjustment of the locking collar with the included spanner wrench.

*fig. F.4*

**NOTE**

*Not all vehicles will have further drop height available.*

7. Re-install lower mount to suspension and torque fasteners.
8. Tighten the lower locking collar to the lower mount using significant force.

**⚠ CAUTION**

WHEN ADJUSTING HEIGHT UPWARD, MAKE SURE THAT THE DAMPER BODY ENGAGES ALL THE THREADS OF THE LOWER MOUNT (FIG. F.5). WHEN ADJUSTING DOWNWARD, MAKE SURE THERE IS ADEQUATE AIR SPRING CLEARANCE TO THE TIRE/WHEEL ASSEMBLY. CLEARANCE MUST BE CHECKED WITH SYSTEM FULLY DEFLATED AS WELL AS FULLY INFLATED TO ENSURE THAT NO RUBBING OCCURS. FAILURE TO MAINTAIN ADEQUATE CLEARANCE CAN RESULT IN AIR SPRING FAILURE AND WILL NOT BE COVERED UNDER WARRANTY.

**⚠ CAUTION**

DO NOT ADJUST HEIGHT BY SPINNING AIR SPRING ON DAMPER! DOING SO MAY CAUSE AN AIR LEAK AND COMPROMISE THE ASSEMBLY.

**FOR STRUTS:**

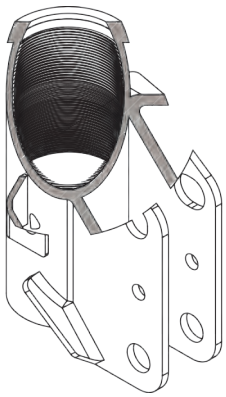

OK, no threads showing.

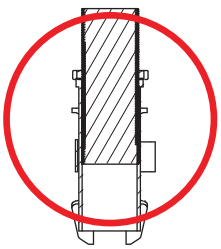

Not OK, threads are showing.

**FOR SHOCKS:**

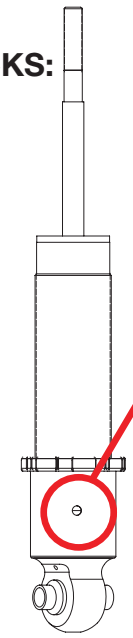

Thread MUST be showing in window.

*fig. F.5*

## INSTALLATION CHECKLIST

☐ **Clearance** — Inflate the air springs to 75-90 PSI (5.2-6.2BAR) and make sure there is at least 1/2" (13mm) clearance from anything that might rub against the air spring. This should be checked with the air spring fully inflated and fully deflated.

☐ **Leak** — Inflate the air springs to 75-90 PSI (5.2-6.2BAR) and check all connections for leaks. All leaks must be eliminated before the vehicle is road tested.

☐ **Heat** — Be sure there is sufficient clearance from heat sources, at least 6" (152mm) from air springs and air lines. If a heat shield was included in the kit, install it. If there is no heat shield, but one is required, call Air Lift customer service at **(800) 248-0892**.

☐ **Fastener** — Recheck all bolts for proper torque.

☐ **Road** — Inflate the springs to recommended driving pressures (Table 2). Drive the vehicle 10 miles (16km) and recheck for clearance, loose fasteners and air leaks.

☐ **Operating instructions** — If professionally installed, the installer should review the operating instructions with the owner. Be sure to provide the owner with all paperwork that came with the kit.

## POST-INSTALLATION CHECKLIST

☐ **Overnight leak down test** — Recheck air pressure 24 hours after installation and driving of the vehicle. If the pressure has dropped more than 5 PSI (.34BAR), there is a leak that must be fixed.

☐ **Air pressure requirements** — It is important to understand the air pressure requirements of the air spring system. Regardless of load, the air pressure should always be adjusted to maintain adequate ride height at all times while driving.

☐ **Thirty-day or 500-mile (800km) test** —Recheck the air spring system after 30 days or 500 miles (800km), whichever comes first. If any part shows signs of rubbing or abrasion, the source should be identified and moved, if possible. If it is not possible to relocate the cause of the abrasion, the air spring may need to be remounted. If professionally installed, the installer should be consulted. Check all fasteners for tightness.

# G. Use, Maintenance and Servicing

1. An Air Lift air management system is strongly recommended for this product, but it is possible to operate without one. The air lines can be routed to Schrader valves for use with a separate air compressor. Air lines and Schrader valves are not included with Air Lift Performance kits and would need to be purchased separately. To learn more about Air Lift air management systems visit **air-lift.co/productlines**.
2. Check the air pressure before driving.

**⚠ WARNING**

BEFORE SERVICING THE VEHICLE, MAKE SURE TO TURN OFF "RISE ON START" AND "PRESET MAINTAIN." THIS WILL ELIMINATE ANY UNINTENDED SUSPENSION CYCLING IF YOU NEED TO TURN THE KEY ON IN THE VEHICLE FOR ANY REASON.

## TUNING THE AIR PRESSURE

Pressure determination comes down to three things — level vehicle, ride comfort and stability.

1. **Level vehicle**
   Depending on load, it is possible one side will need more pressure than the other to level the vehicle.
2. **Ride comfort**
   If the vehicle has a harsh ride, it may be due to either too much pressure or not enough causing frequent bottoming out. Also, riding the vehicle at the top, or close to the top of the available stroke will cause an uncomfortable ride due to a lack of rebound travel. This situation should be avoided for driving any significant distance. Try different pressures to determine the best ride comfort. See the Air Lift suggested driving air pressure for this vehicle (Table 2).
3. **Stability**
   Stability translates into safety and should be the priority, meaning the driver may need to sacrifice a perfectly level and comfortable ride. Stability issues include roll control, bounce, dive during braking and sponginess. Tuning out these problems usually requires additional air pressure, damping or both.

## TROUBLESHOOTING GUIDE

| PROBLEM | CAUSE | SOLUTION |
|---|---|---|
| Air spring won't maintain pressure. | Leak at fitting, air line not cut properly or damage to air line during installation. | Find location of leak by spraying listed components with soapy water solution and look for bubbles. Tighten air fitting, re-cut air line or replace damaged components. |
| | Leak at lower O-ring on damper if air spring is over the damper. | Spray bottom of air spring with soapy water solution and look for bubbles. Contact Air Lift customer service at **(800) 248-0892** to determine if component should be replaced. |
| Knocking noise when hitting bumps. | Loose suspension component such as locking collar on damper or rod nut. | Tighten lower locking collar with significant force, check and tighten suspension components to factory specs at desired ride height. Replace rod nut, apply high strength threadlocker to clean threads and torque M12 rod nut to 54Nm (40 lb.-ft.). M10 rod nuts to be torqued to 38Nm (28 lb.-ft.). |
| | Driving vehicle too close to maximum extension. | Check current ride height and compare to maximum height. If there is less than 1" (25mm) difference, reduce air pressure to lower ride height. |
| | | Lengthen strut or shock to increase available up travel. |
| Suspension bottoms out. | Air pressure is too low, causing air springs to bottom out. | Raise air pressure. |
| The ride is too bouncy. | Air pressure is too high, causing air springs to be too stiff. | Lower air pressure and adjust damper length if necessary to achieve proper ride height. |
| | Damping is inadequate. | Increase damping with adjusters. |
| The ride is too soft or floaty. | Damping is inadequate. | |
| The ride is too harsh. | Excessive damping. | Reduce damping with adjusters. |

# Limited Warranty and Return Policy

Air Lift Company provides a 1-year limited warranty to the original purchaser of Air Lift Performance damper kits from the date of original purchase, that the products will be free from defects in workmanship and materials when used on vehicles as specified by Air Lift Company and under normal operating conditions, subject to the requirements and exclusions set forth in the full Limited Warranty and Return Policy that is available online at **www.airliftperformance.com/warranty**.

For additional warranty information contact Air Lift Company customer service.

# Replacement Part Information

If replacement parts are needed, call Air Lift customer service. Most parts are immediately available and can be shipped the same day.

### Contact Air Lift Company customer service at (800) 248-0892 first if:

- Parts are missing from the kit.
- Need technical assistance on installation or operation.
- Broken or defective parts in the kit.
- Wrong parts in the kit.
- Have a warranty claim or question.

### Contact the retailer where the kit was purchased:

- If it is necessary to return or exchange the kit for any reason.
- If there is a problem with shipping if shipped from the retailer.
- If there is a problem with the price.

# Contact Information

| | |
|---|---|
| **Mailing address** | P.O. Box 80167<br>Lansing, MI 48908-0167 |
| **Shipping address for returns** | 2727 Snow Road<br>Lansing, MI 48917 |
| **Phone** | Toll free: (800) 248-0892<br>International: (517) 322-2144 |
| **Email** | service@airliftcompany.com |
| **Web address** | www.airliftperformance.com |

Air Lift Company reserves the right to make changes and improvements to its products and publications at any time. For the latest version of this manual, contact Air Lift Company at **(800) 248-0892** or visit **www.airliftperformance.com**.

# Need Help?

Contact Air Lift Company customer service department by calling (800) 248-0892. For calls from outside the USA or Canada, dial (517) 322-2144.

CONNECT BY SEARCHING FOR **AIR LIFT PERFORMANCE** *#LIFEONAIR*

*Thank you for purchasing Air Lift Performance products!*

Air Lift Performance • 2727 Snow Road • Lansing, MI 48917 or P.O. Box 80167 • Lansing, MI 48908-0167
Toll Free (800) 248-0892 • Local (517) 322-2144 • Fax (517) 322-0240 • www.airliftperformance.com

Printed in the USA
JJC-0118

# Kit 78667

Lexus IS (XE30), GS (L10)

***Rear Application***

# INSTALLATION GUIDE

For maximum effectiveness and safety, please read these instructions completely before proceeding with installation.

*Failure to read these instructions can result in an incorrect installation.*

MN-1068 • (011801) • ERN 8745

# TABLE OF CONTENTS


**A. Introduction . . . . . 2**
Notation Explanation . . . . . 2

**B. Important Safety Notices . . . . . 2**

**C. Installation Diagram . . . . . 3**
Hardware List . . . . . 3

**D. Installing the Air Suspension . . . . . 4**
Removing the Stock Suspension . . . . . 4
Installing the Air Suspension . . . . . 5
Routing Air Lines. . . . . 8

**E. Tips for Installing the Air Lines . . . . . 9**
Cutting Air Lines . . . . . 9
Push-to-Connect (PTC) Fittings . . . . . 9
Checking for Leaks. . . . . 9
Fixing Leaks . . . . . 9

**F. Finished Installation . . . . . 10**

**G. Before Operating . . . . . 11**
Setting the Ride Height. . . . . 11
Torque Specifications . . . . . 11
Suggested Driving Air Pressure and Maximum Air Pressure . . . . . 11
Check for Binding. . . . . 12
Damping Adjustment . . . . . 12
Aligning the Vehicle. . . . . 12
Adjusting Extended or Drop Height Using Lower Mount . . . . . 13
Installation Checklist. . . . . 14
Post-Installation Checklist . . . . . 14

**H. Use, Maintenance and Servicing. . . . . 15**
Tuning the Air Pressure. . . . . 15
Troubleshooting Guide . . . . . 15

**Limited Warranty and Return Policy . . . . . 17**

**Replacement Part Information . . . . . 17**

**Contact Information . . . . . 17**

# A. Introduction

Air Lift Performance thanks you for purchasing the most complete, fully engineered high-performance air suspension made for the Lexus IS (XE30) and GS (L10). Read these installation instructions to correctly and safely set up the vehicle for a #lifeonair.

Air Lift assumes that the installer has the mechanical knowledge and ability to work on vehicle suspension systems and has basic tools necessary to complete a suspension replacement project. Special tools needed to complete the installation are noted on the Installation Diagram page.

Air Lift reserves the right to make changes and improvements to its products and publications at any time. For the latest version of this manual, contact Air Lift Performance at **(800) 248-0892** or visit **www.airliftperformance.com**.

An Air Lift Performance air management system is highly recommended for this product. Learn more at **air-lift.co/productlines**.

## NOTATION EXPLANATION

Hazard notations appear in various locations in this publication. Information which is highlighted by one of these notations must be observed to help minimize risk of personal injury or possible improper installation which may render the vehicle unsafe. Notes are used to help emphasize areas of procedural importance and provide helpful suggestions. The following definitions explain the use of these notations as they appear throughout this guide.

**DANGER** — INDICATES IMMEDIATE HAZARDS WHICH WILL RESULT IN SEVERE PERSONAL INJURY OR DEATH.

**WARNING** — INDICATES HAZARDS OR UNSAFE PRACTICES WHICH COULD RESULT IN SEVERE PERSONAL INJURY OR DEATH.

**CAUTION** — INDICATES HAZARDS OR UNSAFE PRACTICES WHICH COULD RESULT IN DAMAGE TO THE VEHICLE OR MINOR PERSONAL INJURY.

**NOTE** — *Indicates a procedure, practice or hint which is important to highlight.*

# B. Important Safety Notices

**WARNING** — DO NOT INFLATE AIR SPRINGS WHILE OFF OF THE VEHICLE. DAMAGE TO ASSEMBLY MAY RESULT AND VOID WARRANTY.

**CAUTION** — DO NOT WELD TO OR MODIFY PERFORMANCE STRUTS/SHOCKS IN ANY WAY. DAMAGE TO UNIT MAY OCCUR AND WILL VOID WARRANTY.

**WARNING** — AFTER INSTALLATION, ENSURE ALL ORIGINAL EQUIPMENT VEHICLE SAFETY FEATURES ARE PROPERLY CALIBRATED BY A QUALIFIED TECHNICIAN. CHANGING VEHICLE HEIGHT MAY AFFECT FUNCTIONING OF SAFETY SENSORS AND CAMERAS.

# C. Installation Diagram

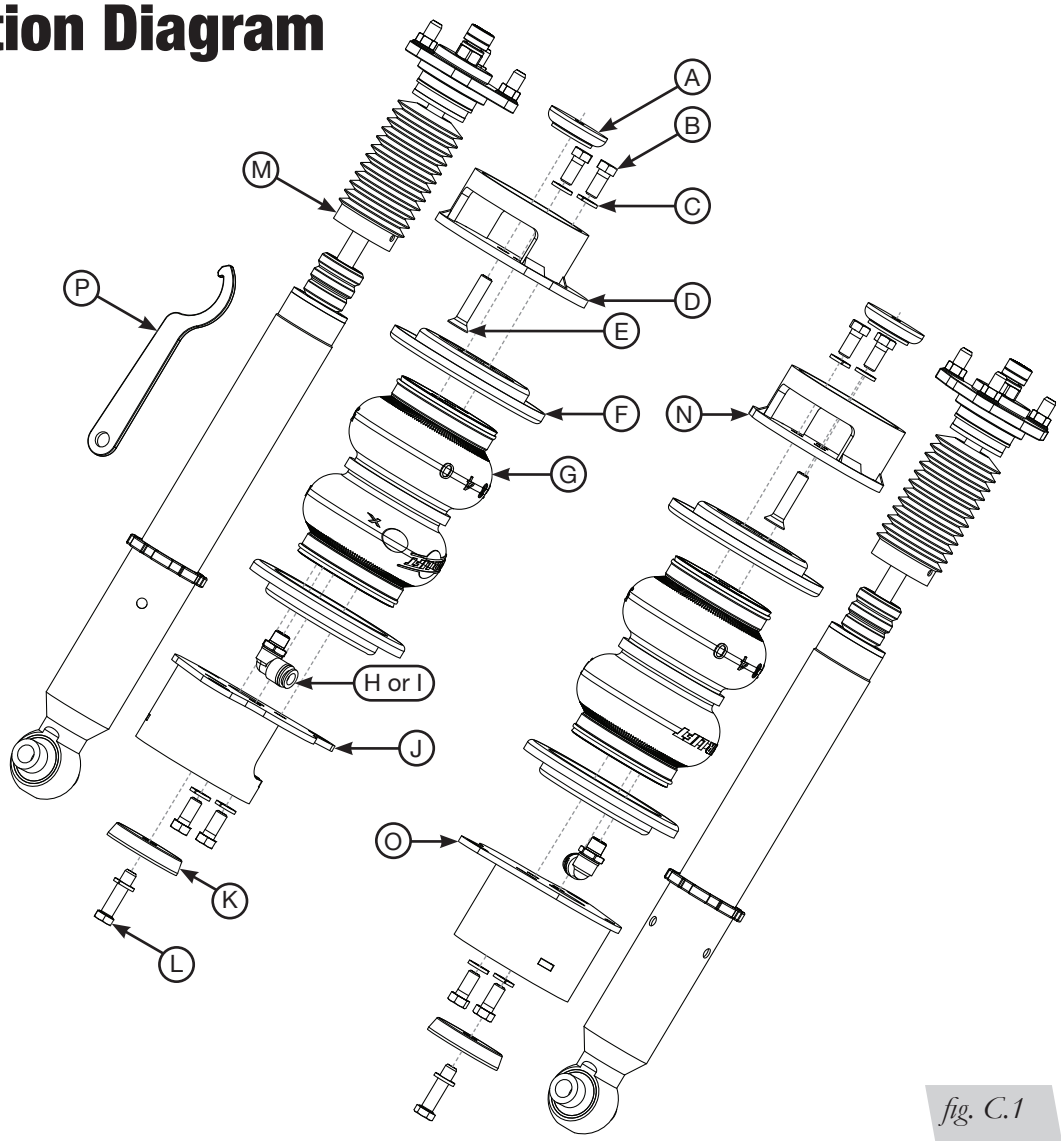


*fig. C.1*

## HARDWARE LIST

| Item | Part # | Description | Qty |
|---|---|---|---|
| A | 13321 | Upper centering spacer | 2 |
| B | 17203 | 3/8”-24 x 7/8” Hex-head bolt | 8 |
| C | 18427 | 3/8” Lock washer | 10 |
| D | 07047 | Left rear upper bracket | 1 |
| E | 17415 | 3/8”-16 x 1 3/4” Flat-head socket cap bolt | 2 |
| F | 11803 | Roll plate | 4 |
| G | 58535 | Air spring | 2 |
| H | 21779 | 1/4” MNPT x 1/4” PTC Elbow fitting | 2 |
| I | 21851 | 1/4” MNPT x 3/8” PTC Elbow fitting | 2 |
| J | 03029 | Left rear lower bracket | 1 |
| K | 13322 | Lower centering spacer | 2 |
| L | 17108 | 3/8”-16 x 1 1/2” Hex-head bolt | 2 |
| M | 26868 | Rear shock | 2 |
| N | 07046 | Right rear upper bracket | 1 |
| O | 03028 | Right rear lower bracket | 1 |
| P | | Spanner wrench | 1 |

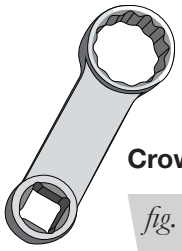

**Crowfoot torque adapter**

*fig. C.2*

## SPECIAL TOOLS REQUIRED

| Description | Qty |
|---|---|
| Hex key socket set | 1 |
| 9/16” Crowfoot torque adapter (Fig. C.2) | 1 |

**STOP!** Missing or damaged parts? Call Air Lift customer service at (800) 248-0892 for a replacement part.

# D. Installing the Air Suspension

**NOTE**

*See "Important Safety Notices" on page 2.*

## REMOVING THE STOCK SUSPENSION

**⚠ CAUTION**

USE JACK STANDS TO SUPPORT THE VEHICLE IF USING A JACK TO LIFT IT.

1. Remove the wheel and support the hub.
2. Remove the fender liner.
3. Disconnect the sway bar end link from the control arm (Fig. D.1).

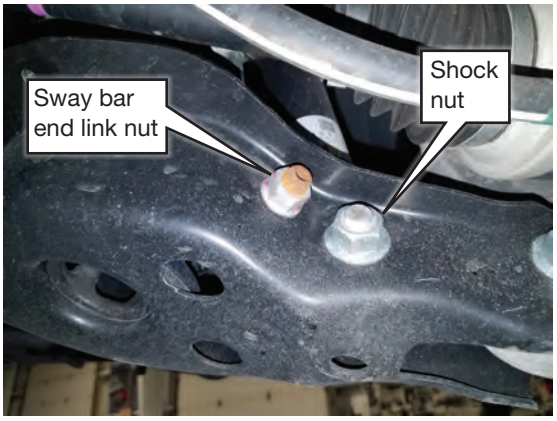


*fig. D.1*

4. Unbolt the shock from the control arm (Fig. D.1).
5. Loosen the lower control arm inner pivot bolt.
6. With the lower control arm supported, disconnect the control arm from the hub (Fig. D.2).

*fig. D.2*

7. Lower the control arm until the spring is relaxed. Remove the spring and rubber isolators (Fig. D.3).

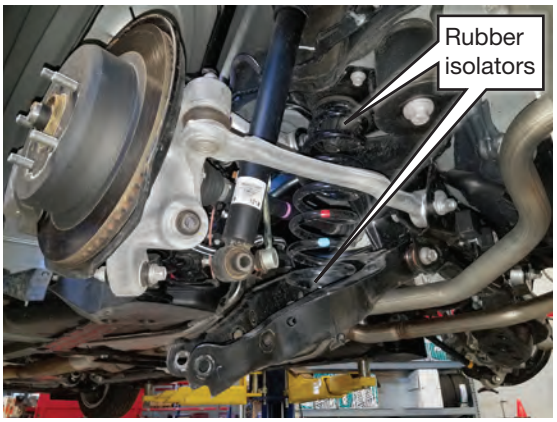


*fig. D.3*

8. From within the luggage compartment, pull the carpet back to access the upper shock mount and remove the upper shock mount nuts. Remove the shock assembly (Fig. D.4).

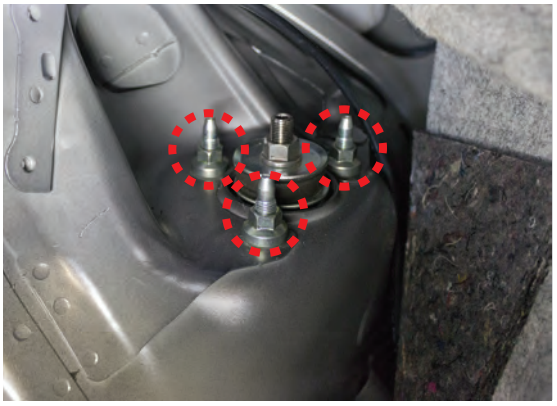

*fig. D.4*

## INSTALLING THE AIR SUSPENSION

1. Install the Air Lift Performance shock in the vehicle and attach with the upper mount nuts. Torque to 67Nm (49 lb.-ft.) (Fig. D.5).

*fig. D.5*

2. Slide the supplied upper centering spacer (A) through the side of the upper spring seat and nest it into the top side of the seat (Figs. D.6 & D.7).

*fig. D.6*

*fig. D.7*

3. Insert two 3/8"-24 x 7/8" hex-head bolts (B) with 3/8" lock washers (C) through the air spring mounting holes from the top of the upper bracket (D or N), labeled "L" and "R" (Fig. D.8).

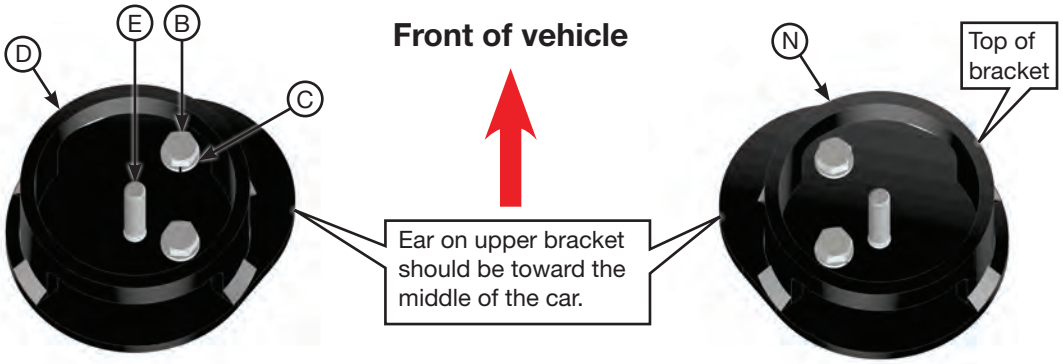


*fig. D.8*

4. Orient the upper mount to the spring seat with the ear pointed toward the middle of the vehicle and attach it to the previously installed centering spacer (Fig. D.9). Use the 3/8"-16 x 1 3/4" flat-head cap socket bolt (E) torqued to 27Nm (20 lb.-ft.).

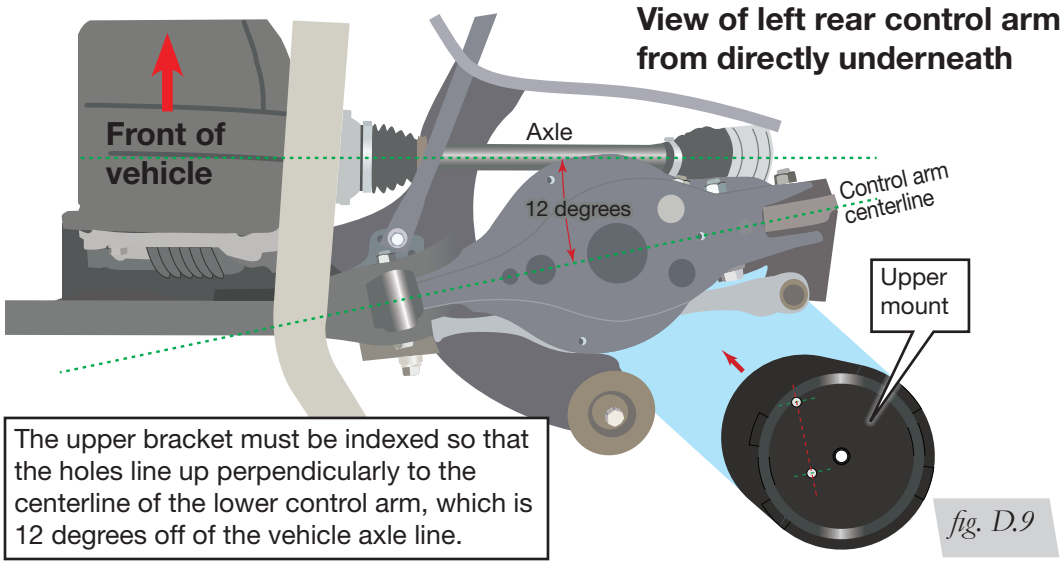


*fig. D.9*

5. Choose the appropriate swivel air fitting (H or I). Tighten the fitting to the air spring 1 3/4 turns beyond hand-tight (Fig. D.10).

*fig. D.10*

6. Attach the air spring with a roll plate (F) to the installed upper mount. The air fitting on the bottom of the air spring must be toward the outside of the car (Fig. D.11). Torque the bolts to 27Nm (20 lb.-ft.) using a 9/16" crowfoot torque adapter (Fig. C.2).

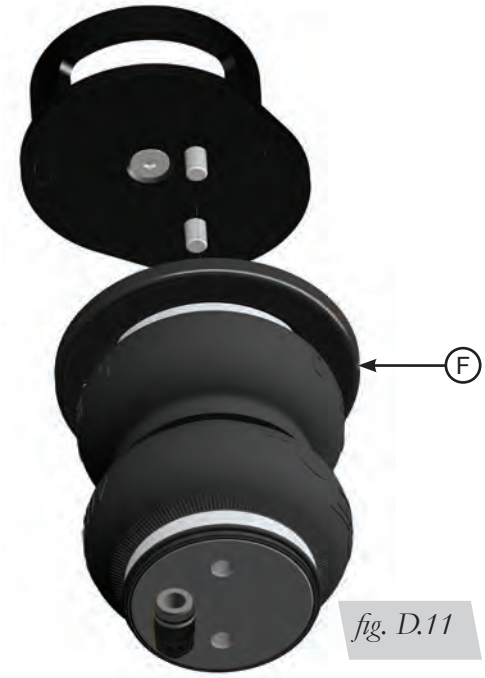


*fig. D.11*

7. Assemble a roll plate (F) and the lower mount (J or O) to the air spring with 3/8"-24 x 7/8" bolts (B) and 3/8" lock washers (C) (Fig. D.12). Torque the bolts to 27Nm (20 lb.-ft.) using the crowfoot adapter.

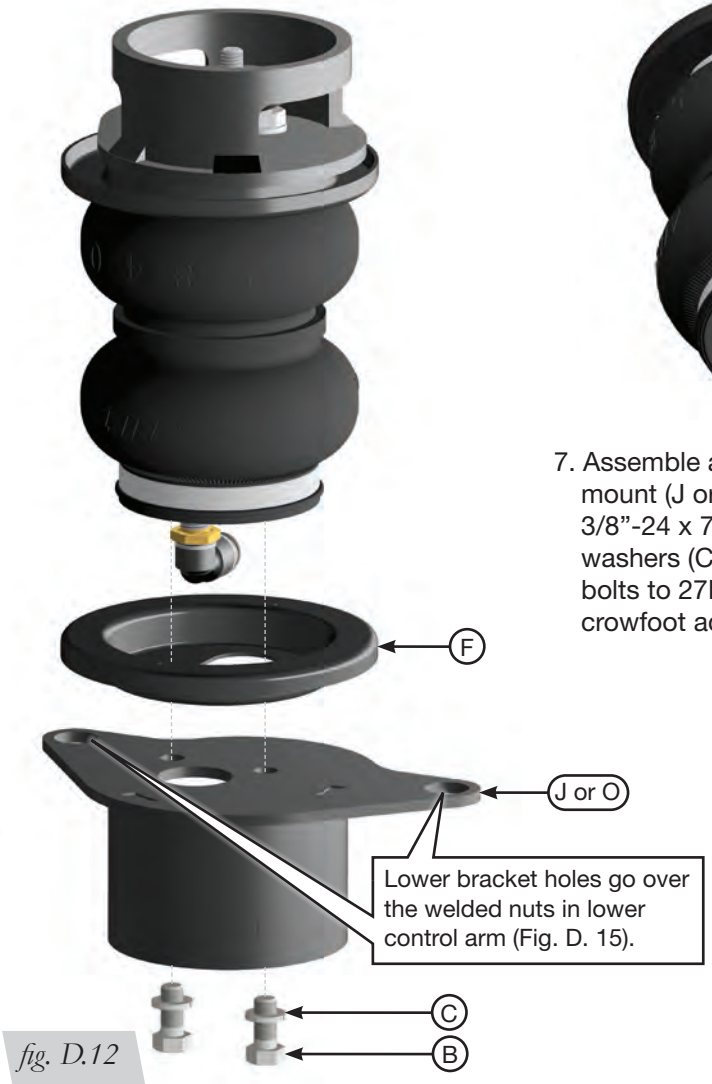


*fig. D.12*

8. Install the shock bushing spacers (Fig. D.13). Reconnect the lower control arm to the hub. Reattach the lower shock mount bolt and nut (Fig. D.14). Torque both, along with the lower control arm pivot bolt, during the “Setting The Ride Height” steps.

*fig. D.13*

*fig. D.14*

9. Install the lower centering spacer (K) with 3/8”-16 x 1 1/2” hex-head bolt (L) and lock washer (C) through the lower control arm, attaching it to the lower bracket. Torque to 27Nm (20 lb.-ft.) (Figs. D.15 & D.16).

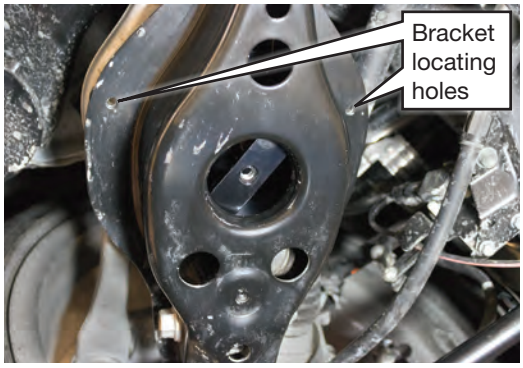


*fig. D.15*

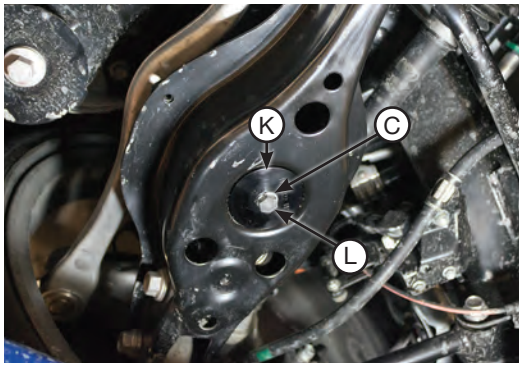


*fig. D.16*

10. Reattach the sway bar end link. Torque to 70Nm (52 lb.-ft.) (Fig. D.14).
11. Reinstall the fender liner.

## ROUTING AIR LINES

1. Fully compress the suspension using a jack. With the suspension compressed, review the best routing for the air line that is clear of all suspension components and axle.
2. Routing should also allow for the suspension to extend without kinking or pulling the line tight or rubbing on other components. Check clearances to all other components.

**⚠ WARNING**

AFTER INSTALLATION, ENSURE ALL ORIGINAL EQUIPMENT VEHICLE SAFETY FEATURES ARE PROPERLY CALIBRATED BY A QUALIFIED TECHNICIAN. CHANGING VEHICLE HEIGHT MAY AFFECT FUNCTIONING OF SAFETY SENSORS AND CAMERAS.

# E. Tips for Installing the Air Lines

## CUTTING AIR LINES

When cutting air lines, use a sharp knife or a hose cutter and make clean, square cuts (Fig. E.1). Do not use scissors or wire cutters because these tools will deform the air line, causing it to leak around fittings. Do not cut the lines at an angle.

*fig. E.1*

The minimum bend radius for 1/4" air line is 1" (25mm). The minimum bend radius for 3/8" air line is 1 1/2" (38mm). Do not bend the air line less than the minimum bend radius or side load the fitting connections. Air lines are to be installed straight into fittings.

Inspect the air line for scratches that run lengthwise prior to installation. Contact Air Lift customer service at **(800) 248-0892** if the air line is damaged.

To watch a video demonstrating proper air line cutting, go to **air-lift.co/cuttingairline**

## PUSH-TO-CONNECT (PTC) FITTINGS

Air lines should be pushed into the push-to-connect fittings firmly, with a slight side-to-side rotational twist. Check the connection by pulling on each line to verify a robust connection.

**NOTE**

*To release the air line from the connection (Fig. E.2), first release all air from the system. Push in on the air line (step 1), push the collar in (step 2), and with the collar depressed, pull the air line out of the fitting (step 3).*

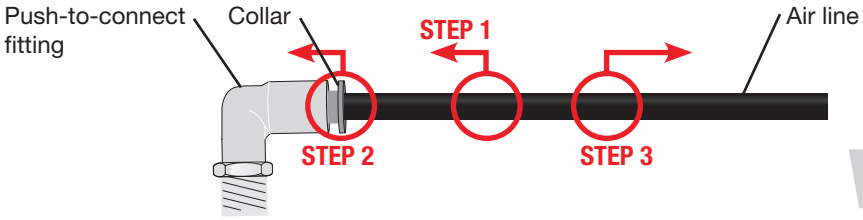


*fig. E.2*

## CHECKING FOR LEAKS

1. Inflate the air spring to 75-90 PSI (5.2-6.2BAR).
2. Spray all connections with a solution of liquid dish soap and water. Spot leaks easily by looking for bubbles in the soapy water.
3. After the test, deflate the springs to the minimum pressure required to restore the system to normal ride height.
4. Check the air pressure again after 24 hours. A 2-4 PSI (.14-.28BAR) loss after initial installation is normal. Retest for leaks if the loss is more than 5 PSI (.34BAR).

## FIXING LEAKS

1. If there is a problem with the push-to-connect fitting, remove the air line as described above. Trim 1" (25mm) off the end of the air line. Be sure the cut is clean and square (see Fig. E.1).
2. Reinsert the air line into the push-to-connect fitting as described above.

# F. Finished Installation

Fig. F.1 shows the finished installation.

*fig. F.1*

# G. Before Operating

## SETTING THE RIDE HEIGHT

1. With the suspension fully compressed, take a measurement from the fender to a chosen reference point – typically the center of the axle. Record this measurement as max compression (MC).
2. Cycle the suspension to max extension (ME) and record the measurement from the fender to the same reference point.
3. Add ME and MC, then divide the total by 2. Set the suspension to this point. This position will give 50% stroke in either direction and is a starting point for ride height (Fig. G.1).

| Formula for Calculating Ride Height |
|---|
| **(ME+MC)÷2=MID STROKE** |

*fig. G.1*

4. With the suspension at this position, loosen, then re-torque all suspension bushing pivot joint fasteners to the manufacturer's specifications (Table 1):

| Torque Specifications | | |
|---|---|---|
| Location | Nm | Lb.-ft. |
| Upper shock mount nuts | 67 | 49 |
| Air spring attaching bolts | 27 | 20 |
| Upper and lower bracket mounting bolts | 27 | 20 |
| End link nut | 70 | 52 |
| Control arm pivot bolt | 150 | 111 |
| Lower shock mount bolt to control arm | 110 | 81 |
| Control arm to hub | 145 | 107 |
| Air fitting | 1 3/4 turns beyond hand-tight | |
| Wheel studs | 103 | 76 |

*Table 1*

| Suggested Driving Air Pressure | Maximum Air Pressure |
|---|---|
| **100-120 PSI (6.9-8.3BAR)** | **165 PSI (11.4BAR)** |
| FAILURE TO MAINTAIN ADEQUATE MINIMUM PRESSURE (OR PRESSURE PROPORTIONAL TO LOAD) MAY RESULT IN EXCESSIVE BOTTOMING OUT AND **WILL VOID THE WARRANTY**. | |

*Table 2*

## CHECK FOR BINDING

1. Inflate and deflate the system (do not exceed 165 PSI [11.4BAR]) to check for clearance or binding issues. With the air springs deflated, check clearances on everything so as not to pinch brake lines, vent tubes, etc. Clear lines if necessary.
2. Inflate the air springs to 75-90 PSI (5.2-6.2BAR) and check all connections for leaks.

**⚠ CAUTION**

MAKE SURE THE FRONT WHEELS ARE STRAIGHT WHEN DEFLATING AND REINFLATING AIR SPRINGS.

## DAMPING ADJUSTMENT

Suspension damping is a matter of compromise. Setting it too stiff will make the ride feel jarring. In addition, if the suspension is too stiff, the tires will lose contact with the road, reducing control and power delivery. On the other hand, if the suspension is too soft, the car can experience brake dive and excessive bouncing. The sweet spot lies somewhere in the middle. Air Lift dampers have a range of adjustment, which allows the driver to tune the ride and handling to his or her preferences.

Air Lift recommends damper and air pressure settings for every vehicle kit, but it is impossible to consider every situation. For example, even though Air Lift kits replace the dampers and springs, vehicles with sport-tuned suspensions might have stiffer bushings, larger anti-roll bars, bigger wheels, wider tires, etc. These settings may need to be adjusted to different vehicles and driving characteristics.

1. The dampers in this kit have 30 settings, or ”clicks,” of adjustable compression and rebound damping characteristics. Damping is changed through the damper rod using the supplied adjuster (Figs. G.2 & G.3).
2. Turn the adjuster clockwise (H) and the damping settings are hardened, reducing oscillations and body motion. Turn the adjuster counterclockwise (S) and the damping is softened.
3. Each damper in this kit is preset to ”-20 clicks.” This means that the damper is adjusted 20 clicks away from full stiff, which starts at 0. Counting up from full stiff is the preferred method of keeping track of, or setting, damping. This setting was developed on a 2016 Lexus IS 200t with stock suspension.

*fig. G.2*

*fig. G.3*

## ALIGNING THE VEHICLE

1. Set the vehicle to the height at which it will most often be driven.
2. If the ride height is lower than stock, Air Lift Performance recommends loosening all pivot points (bolts, nuts) on any control arm, strut arm or radius rod that contains bushings. Once they have been loosened, re-torque to stock specifications (Table 1).

**NOTE**

*It may be necessary to cycle the suspension to loosen the bushing from its mount. This will help re-orient the bushing at its new position based on the chosen ride height.*

3. Get a professional alignment of the vehicle at the new chosen ride height.

## ADJUSTING EXTENDED OR DROP HEIGHT USING LOWER MOUNT

These dampers have been preset at the factory to provide maximum drop height while maintaining adequate tire clearance to the air spring. If you wish to gain more extended height (lift), which is the same as reducing drop height, or want to lower the chassis further and there is still adjustment available at the lower mount, please use the following procedure:

1. Support the vehicle with jack stands or a hoist at approved lifting points.
2. Remove the wheel.
3. Using the supplied spanner wrench, loosen the locking collar (Fig. G.4).
4. Deflate the air spring to 0 pressure on the corner you are adjusting.
5. Disconnect lower mount from suspension.
6. Spin the lower mount to the desired location.

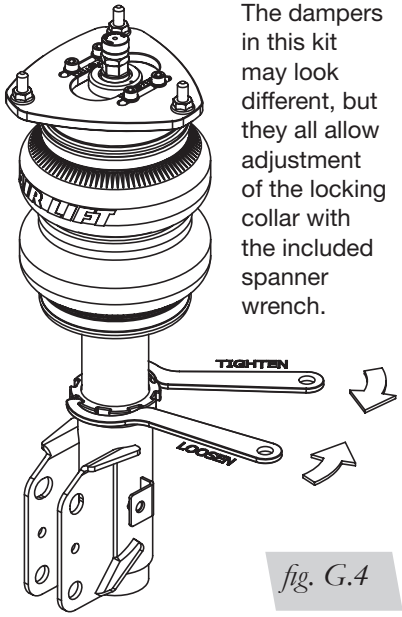


The dampers in this kit may look different, but they all allow adjustment of the locking collar with the included spanner wrench.

*fig. G.4*

**NOTE**

*Not all vehicles will have further drop height available.*

7. Re-install lower mount to suspension and torque fasteners.
8. Tighten the lower locking collar to the lower mount using significant force.

**⚠ CAUTION**

WHEN ADJUSTING HEIGHT UPWARD, MAKE SURE THAT THE DAMPER BODY ENGAGES ALL THE THREADS OF THE LOWER MOUNT (FIG. G.5). WHEN ADJUSTING DOWNWARD, MAKE SURE THERE IS ADEQUATE AIR SPRING CLEARANCE TO THE TIRE/WHEEL ASSEMBLY. CLEARANCE MUST BE CHECKED WITH SYSTEM FULLY DEFLATED AS WELL AS FULLY INFLATED TO ENSURE THAT NO RUBBING OCCURS. FAILURE TO MAINTAIN ADEQUATE CLEARANCE CAN RESULT IN AIR SPRING FAILURE AND WILL NOT BE COVERED UNDER WARRANTY.

**⚠ CAUTION**

DO NOT ADJUST HEIGHT BY SPINNING AIR SPRING ON DAMPER! DOING SO MAY CAUSE AN AIR LEAK AND COMPROMISE THE ASSEMBLY.

**FOR STRUTS:**

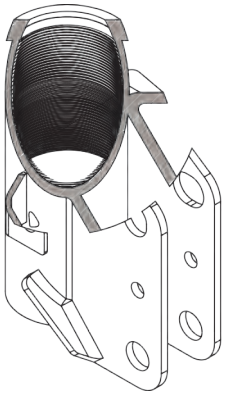

OK, no threads showing.

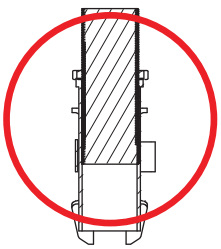

Not OK, threads are showing.

**FOR SHOCKS:**

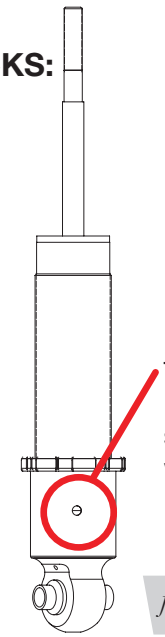

Thread MUST be showing in window.

*fig. G.5*

## INSTALLATION CHECKLIST

☐ **Clearance** — Inflate the air springs to 75-90 PSI (5.2-6.2BAR) and make sure there is at least 1/2" (13mm) clearance from anything that might rub against the air spring. This should be checked with the air spring fully inflated and fully deflated.

☐ **Leak** — Inflate the air springs to 75-90 PSI (5.2-6.2BAR) and check all connections for leaks. All leaks must be eliminated before the vehicle is road tested.

☐ **Heat** — Be sure there is sufficient clearance from heat sources, at least 6" (152mm) from air springs and air lines. If a heat shield was included in the kit, install it. If there is no heat shield, but one is required, call Air Lift customer service at **(800) 248-0892**.

☐ **Fastener** — Recheck all bolts for proper torque.

☐ **Road** — Inflate the springs to recommended driving pressures (Table 2). Drive the vehicle 10 miles (16km) and recheck for clearance, loose fasteners and air leaks.

☐ **Operating instructions** — If professionally installed, the installer should review the operating instructions with the owner. Be sure to provide the owner with all paperwork that came with the kit.

## POST-INSTALLATION CHECKLIST

☐ **Overnight leak down test** — Recheck air pressure 24 hours after installation and driving of the vehicle. If the pressure has dropped more than 5 PSI (.34BAR), there is a leak that must be fixed.

☐ **Air pressure requirements** — It is important to understand the air pressure requirements of the air spring system. Regardless of load, the air pressure should always be adjusted to maintain adequate ride height at all times while driving.

☐ **Thirty-day or 500-mile (800km) test** —Recheck the air spring system after 30 days or 500 miles (800km), whichever comes first. If any part shows signs of rubbing or abrasion, the source should be identified and moved, if possible. If it is not possible to relocate the cause of the abrasion, the air spring may need to be remounted. If professionally installed, the installer should be consulted. Check all fasteners for tightness.

# H. Use, Maintenance and Servicing

1. An Air Lift air management system is strongly recommended for this product, but it is possible to operate without one. The air lines can be routed to Schrader valves for use with a separate air compressor. Air lines and Schrader valves are not included with Air Lift Performance kits and would need to be purchased separately. To learn more about Air Lift air management systems visit **air-lift.co/productlines**.
2. Check the air pressure before driving.

**⚠ WARNING**

BEFORE SERVICING THE VEHICLE, MAKE SURE TO TURN OFF ”RISE ON START” AND ”PRESET MAINTAIN.” THIS WILL ELIMINATE ANY UNINTENDED SUSPENSION CYCLING IF YOU NEED TO TURN THE KEY ON IN THE VEHICLE FOR ANY REASON.

## TUNING THE AIR PRESSURE

Pressure determination comes down to three things — level vehicle, ride comfort and stability.

1. **Level vehicle**
   Depending on load, it is possible one side will need more pressure than the other to level the vehicle.
2. **Ride comfort**
   If the vehicle has a harsh ride, it may be due to either too much pressure or not enough causing frequent bottoming out. Also, riding the vehicle at the top, or close to the top of the available stroke will cause an uncomfortable ride due to a lack of rebound travel. This situation should be avoided for driving any significant distance. Try different pressures to determine the best ride comfort. See the Air Lift suggested driving air pressure for this vehicle (Table 2).
3. **Stability**
   Stability translates into safety and should be the priority, meaning the driver may need to sacrifice a perfectly level and comfortable ride. Stability issues include roll control, bounce, dive during braking and sponginess. Tuning out these problems usually requires additional air pressure, damping or both.

**TROUBLESHOOTING GUIDE**

| PROBLEM | CAUSE | SOLUTION |
|---|---|---|
| Air spring won't maintain pressure. | Leak at fitting, air line not cut properly or damage to air line during installation. | Find location of leak by spraying listed components with soapy water solution and look for bubbles. Tighten air fitting, re-cut air line or replace damaged components. |
| | Leak at lower O-ring on damper if air spring is over the damper. | Spray bottom of air spring with soapy water solution and look for bubbles. Contact Air Lift customer service at **(800) 248-0892** to determine if component should be replaced. |
| Knocking noise when hitting bumps. | Loose suspension component such as locking collar on damper or rod nut. | Tighten lower locking collar with significant force, check and tighten suspension components to factory specs at desired ride height. Replace rod nut, apply high strength threadlocker to clean threads and torque M12 rod nut to 54Nm (40 lb.-ft.). M10 rod nuts to be torqued to 38Nm (28 lb.-ft.). |
| | Driving vehicle too close to maximum extension. | Check current ride height and compare to maximum height. If there is less than 1” (25mm) difference, reduce air pressure to lower ride height. |
| | | Lengthen strut or shock to increase available up travel. |
| Suspension bottoms out. | Air pressure is too low, causing air springs to bottom out. | Raise air pressure. |
| The ride is too bouncy. | Air pressure is too high, causing air springs to be too stiff. | Lower air pressure and adjust damper length if necessary to achieve proper ride height. |
| | Damping is inadequate. | Increase damping with adjusters. |
| The ride is too soft or floaty. | Damping is inadequate. | |
| The ride is too harsh. | Excessive damping. | Reduce damping with adjusters. |

# Notes

# Limited Warranty and Return Policy

Air Lift Company provides a 1-year limited warranty to the original purchaser of Air Lift Performance damper kits from the date of original purchase, that the products will be free from defects in workmanship and materials when used on vehicles as specified by Air Lift Company and under normal operating conditions, subject to the requirements and exclusions set forth in the full Limited Warranty and Return Policy that is available online at **www.airliftperformance.com/warranty**.

For additional warranty information contact Air Lift Company customer service.

# Replacement Part Information

If replacement parts are needed, call Air Lift customer service. Most parts are immediately available and can be shipped the same day.

### Contact Air Lift Company customer service at (800) 248-0892 first if:

- Parts are missing from the kit.
- Need technical assistance on installation or operation.
- Broken or defective parts in the kit.
- Wrong parts in the kit.
- Have a warranty claim or question.

### Contact the retailer where the kit was purchased:

- If it is necessary to return or exchange the kit for any reason.
- If there is a problem with shipping if shipped from the retailer.
- If there is a problem with the price.

# Contact Information

| | |
|---|---|
| **Mailing address** | P.O. Box 80167<br>Lansing, MI 48908-0167 |
| **Shipping address for returns** | 2727 Snow Road<br>Lansing, MI 48917 |
| **Phone** | Toll free: (800) 248-0892<br>International: (517) 322-2144 |
| **Email** | service@airliftcompany.com |
| **Web address** | www.airliftperformance.com |

Air Lift Company reserves the right to make changes and improvements to its products and publications at any time. For the latest version of this manual, contact Air Lift Company at **(800) 248-0892** or visit **www.airliftperformance.com**.

# Need Help?

Contact Air Lift Company customer service department by calling (800) 248-0892. For calls from outside the USA or Canada, dial (517) 322-2144.

CONNECT BY SEARCHING FOR **AIR LIFT PERFORMANCE** *#LIFEONAIR*

*Thank you for purchasing Air Lift Performance products!*

Air Lift Performance • 2727 Snow Road • Lansing, MI 48917 or P.O. Box 80167 • Lansing, MI 48908-0167
Toll Free (800) 248-0892 • Local (517) 322-2144 • Fax (517) 322-0240 • www.airliftperformance.com

Printed in the USA
JJC-0118