Kit 78572

Volkswagen T5/T6
(T26/T28/T30)

Front Application

INSTALLATION GUIDE

For maximum effectiveness and safety, please read these instructions completely before proceeding with installation.

Failure to read these instructions can result in an incorrect installation.

MN-1078 • (011812) • ERN 9032

TABLE OF CONTENTS

A. Introduction

Air Lift Performance thanks you for purchasing the most complete, fully engineered high-performance air suspension made for the Volkswagen T5/T6. Read these installation instructions to correctly and safely set up the vehicle for a #lifeonair.

Air Lift assumes that the installer has the mechanical knowledge and ability to work on vehicle suspension systems and has basic tools necessary to complete a suspension replacement project.

Air Lift reserves the right to make changes and improvements to its products and publications at any time. For the latest version of this manual, contact Air Lift Performance at **(800) 248-0892** or visit **www.airliftperformance.com**.

An Air Lift Performance air management system is highly recommended for this product. Learn more at **air-lift.co/productlines**.

NOTATION EXPLANATION

Hazard notations appear in various locations in this publication. Information which is highlighted by one of these notations must be observed to help minimize risk of personal injury or possible improper installation which may render the vehicle unsafe. Notes are used to help emphasize areas of procedural importance and provide helpful suggestions. The following definitions explain the use of these notations as they appear throughout this guide.

DANGER — INDICATES IMMEDIATE HAZARDS WHICH WILL RESULT IN SEVERE PERSONAL INJURY OR DEATH.

WARNING — INDICATES HAZARDS OR UNSAFE PRACTICES WHICH COULD RESULT IN SEVERE PERSONAL INJURY OR DEATH.

CAUTION — INDICATES HAZARDS OR UNSAFE PRACTICES WHICH COULD RESULT IN DAMAGE TO THE VEHICLE OR MINOR PERSONAL INJURY.

NOTE — *Indicates a procedure, practice or hint which is important to highlight.*

B. Important Safety Notices

WARNING — DO NOT INFLATE AIR SPRINGS WHILE OFF OF THE VEHICLE. DAMAGE TO ASSEMBLY MAY RESULT AND VOID WARRANTY.

WARNING — DO NOT WELD TO OR MODIFY PERFORMANCE STRUTS/SHOCKS IN ANY WAY. DAMAGE TO UNIT MAY OCCUR AND WILL VOID WARRANTY.

CAUTION — AFTER INSTALLATION, ENSURE ALL ORIGINAL EQUIPMENT VEHICLE SAFETY FEATURES ARE PROPERLY CALIBRATED BY A QUALIFIED TECHNICIAN. CHANGING VEHICLE HEIGHT MAY AFFECT FUNCTIONING OF SAFETY SENSORS AND CAMERAS.

C. Installation Diagram

⚠ CAUTION

THIS KIT REQUIRES THE REMOVAL OF FACTORY TORQUE-TO-YIELD BOLTS. THESE BOLTS ARE DESIGNED TO BE REPLACED AFTER THEY HAVE BEEN LOOSENED. TORQUE-TO-YIELD BOLTS ARE INDICATED IN THE INSTRUCTIONS AND IN THE TORQUE SPECIFICATION CHART.

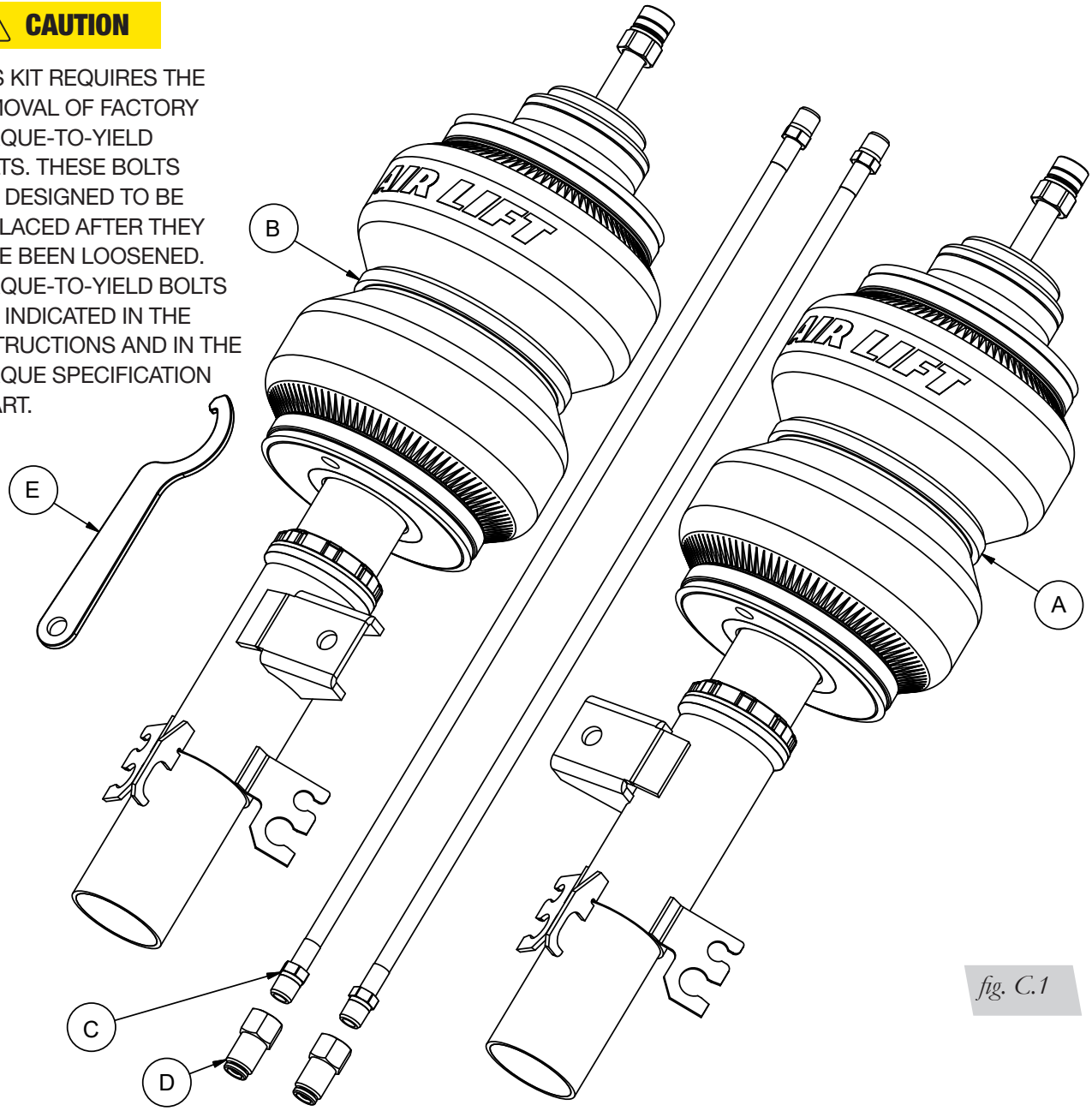

fig. C.1

HARDWARE LIST

Item	Part #	Description	Qty
A	35431	Strut, VW T5/T6 LF	1
B	35432	Strut, VW T5/T6 RF	1
C	20997	Leader hose	2
D	21987	Union, 1/4” FNPT x 3/8” PTC	2
E	11289	Spanner wrench	1

TORQUE-TO-YIELD BOLTS*

Description	Qty
Anti-roll bar linkage to damper	1
Tie rod nut to knuckle	1
Lower control arm ball joint bolts	2

* These bolts are not included with this kit

STOP! Missing or damaged parts? Call Air Lift customer service at (800) 248-0892 for a replacement part.

D. Installing the Air Suspension

NOTE *See "Important Safety Notices" on page 2.*

PREPARING THE VEHICLE

1. Elevate and support the vehicle with a hoist or safety stands.
2. Remove the front wheel (Fig. D.1).

fig. D.1

REMOVING THE FRONT DAMPER

1. Disconnect the anti-roll bar linkage from the damper assembly (Fig. D.2).

fig. D.2

2. Unclip the brake line and wheel speed sensor wire from the damper assembly (Figs. D.3 & D.4).

fig. D.3

fig. D.4

3. Unbolt the steering knuckle from the damper assembly (Fig. D.5).

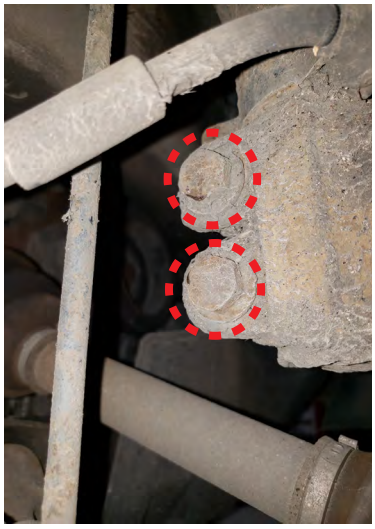

fig. D.5

4. Remove the toe link from the steering knuckle (Figs. D.6 & D.7).

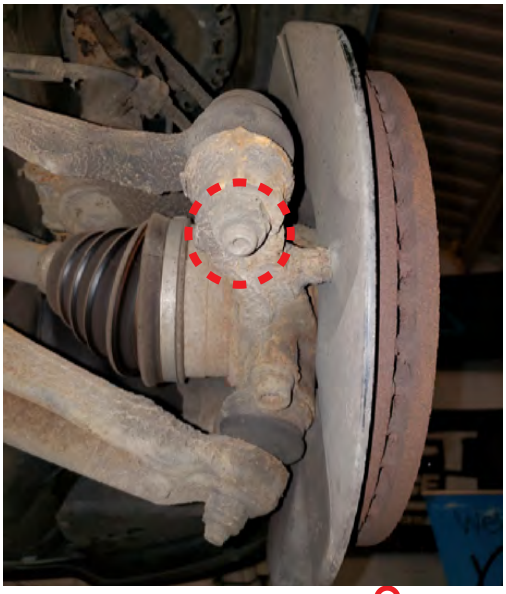

fig. D.6

fig. D.7

5. Unbolt the lower ball joint from the steering knuckle (Fig. D.8).

fig. D.8

6. Remove the axle bolt and disconnect the axle from the wheel bearing (Fig. D.9).

fig. D.9

7. Slide the knuckle assembly off the damper assembly. Reattach the knuckle assembly to the lower ball joint (Fig. D.10).

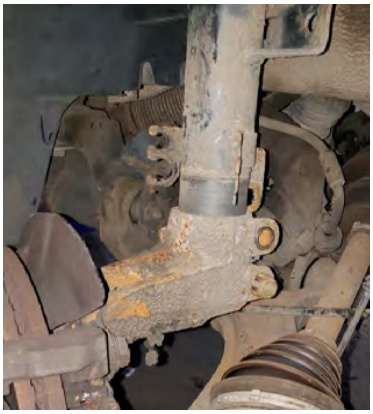

fig. D.10

8. Remove the cowl seal and access panel at the back of the engine compartment (Figs. D.11 & D.12).

fig. D.11

fig. D.12

9. Remove the rubber cover and the damper rod nut. Remove the damper assembly from the vehicle (Figs. D.13 & D.14).

fig. D.13

fig. D.14

DANGER

THE COIL SPRING IS UNDER COMPRESSION. THE COIL SPRING SHOULD BE REMOVED USING FACTORY PRESCRIBED GUIDELINES.

10. Use a coil spring compressor and remove the rubber upper mount, jam nut, and aluminum spring seat retaining the spring to the damper assembly. Discard the aluminum spring seat. Retain the jam nut and rubber upper mount (Fig. D.15).

fig. D.15

ASSEMBLING THE AIR SUSPENSION

1. With the new air spring/damper assembly, remove the rod nut and attach the rubber upper mount using the OEM jam nut. Torque to 35Nm (26 lbs.-ft.) (Figs. D.16 & D.17).

fig. D.16

fig. D.17

2. Apply thread sealant to the threads of the leader hose. Tighten the fitting to the air line (one and three-quarter turns beyond hand-tight). Tighten the leader line into the air spring one and three-quarter turns beyond hand-tight (Fig. D.18).

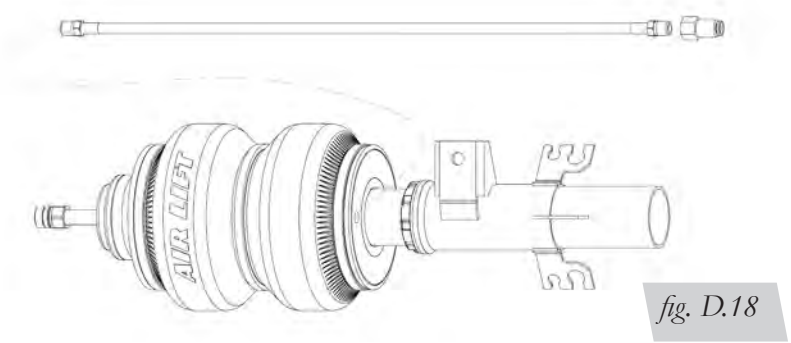

fig. D.18

INSTALLING THE AIR SUSPENSION

1. Insert the damper assembly through the strut tower and attach the rebound washer with the supplied rod nut (not shown). Torque to 35Nm (26 lbs.-ft.) (Figs. D.19 & D.20).

fig. D.19

fig. D.20

2. Reattach the access panel and cowl seal (Fig. D.21).

fig. D.21

3. Disconnect the steering knuckle from the lower ball joint and slide onto the damper assembly. Secure with the lower pinch bolts. Torque to 75Nm (55 lb.-ft.) (Fig. D.22).

fig. D.22

4. Align and insert the axle through the wheel bearing. Replace the axle bolt and torque unloaded to 200Nm (148 lb.-ft.). Loosen 180 degrees and retorque 200 Nm (148 lb.-ft.) (Fig. D.23).

fig. D.23

5. Reattach the lower control arm ball joint to the knuckle. Torque to 60Nm + 90 degrees (44 lb.-ft. + 90 degrees) (Fig. D.24).

fig. D.24

6. Reattach the tie rod to the knuckle. Torque to 90Nm + 45 degrees (66 lb.-ft. + 45 degrees).
7. Clip the brake line and sensor wire in place (Fig. D.25).

fig. D.25

8. Attach the anti-roll bar to the damper and torque to 60Nm + 45 degrees (44 lb.-ft. + 45 degrees). (Figs. D.26 & D.27).

fig. D.26

fig. D.27

ROUTING THE AIR LINES

1. Fully compress the suspension using a jack. With the suspension compressed, review the best routing for the air line that is clear of all suspension and steering components.
2. Routing should allow for the suspension to extend and steer without kinking, pulling the line tight or rubbing on other components. Following the brake line routing is often a good place to start. Check clearances to all other components.

⚠ WARNING

AFTER INSTALLATION, ENSURE ALL ORIGINAL EQUIPMENT VEHICLE SAFETY FEATURES ARE PROPERLY CALIBRATED BY A QUALIFIED TECHNICIAN. CHANGING VEHICLE HEIGHT MAY AFFECT FUNCTIONING OF SAFETY SENSORS AND CAMERAS.

E. Finished Installation Photo

fig. E.1

F. Before Operating

SETTING THE RIDE HEIGHT

1. Refer to the User Guide supplied with this kit to set up the suspension.

Torque Specifications			
Location	TTY	Nm	Lb.-ft.
Lower damper mount bolts		75	55
Anti-roll bar linkage to damper	✓	60 + 45 degrees	44 + 45 degrees
Tie rod nut to knuckle	✓	90 + 45 degrees	66 + 45 degrees
Lower control arm ball joint bolts	✓	60 + 90 degrees	44 + 90 degrees
Axle bolt		200	148
Damper rod nut		35	26
Wheel bolts	Factory Specification		
Damper locking collar	45 degrees beyond hand tight		
Air line and fitting	1 and 3/4 turns beyond hand tight with thread sealant		

Table 1

⚠ CAUTION

TORQUE-TO-YIELD BOLTS ARE DESIGNED TO BE REPLACED AFTER THEY HAVE BEEN LOOSENED.

Suggested Driving Air Pressure	Maximum Air Pressure
50-60 PSI (3.4-4.1BAR)	**125 PSI (8.6BAR)**
FAILURE TO MAINTAIN ADEQUATE MINIMUM PRESSURE (OR PRESSURE PROPORTIONAL TO LOAD) MAY RESULT IN EXCESSIVE BOTTOMING OUT AND **WILL VOID THE WARRANTY**.	

Table 2

CHECK FOR BINDING

1. Inflate and deflate the system (do not exceed 125 PSI [8.6BAR]) to check for clearance or binding issues. With the air springs deflated, check clearances on everything so as not to pinch brake lines, vent tubes, etc. Clear lines if necessary.
2. Inflate the air springs to 75-90 PSI (5.2-6.2BAR) and check all connections for leaks.

⚠ CAUTION

MAKE SURE THE FRONT WHEELS ARE STRAIGHT WHEN DEFLATING AND REINFLATING AIR SPRINGS.

INSTALLATION CHECKLIST

- ☐ **Clearance** — Inflate the air springs to 75-90 PSI (5.2-6.2BAR) and make sure there is at least 1/2" (13mm) clearance from anything that might rub against the air spring. This should be checked with the air spring fully inflated and fully deflated.
- ☐ **Leak** — Inflate the air springs to 75-90 PSI (5.2-6.2BAR) and check all connections for leaks. All leaks must be eliminated before the vehicle is road tested.
- ☐ **Heat** — Be sure there is sufficient clearance from heat sources, at least 6" (152mm) from air springs and air lines. If a heat shield was included in the kit, install it. If there is no heat shield, but one is required, call Air Lift customer service at **(800) 248-0892**.
- ☐ **Fastener** — Recheck all bolts for proper torque.
- ☐ **Road** — Inflate the springs to recommended driving pressures (Table 2). Drive the vehicle 10 miles (16km) and recheck for clearance, loose fasteners and air leaks.
- ☐ **Operating instructions** — If professionally installed, the installer should review the operating instructions with the owner. Be sure to provide the owner with all paperwork that came with the kit.

DAMPING ADJUSTMENT

1. The dampers in this kit have 30 settings, or "clicks," of adjustable compression and rebound damping characteristics. Damping is changed through the damper rod using the supplied adjuster (Figs. F.1 & F.2) or a 3mm hex key (not included).
2. Turn the adjuster clockwise (H) and the damping settings are hardened, reducing oscillations and body motion. Turn the adjuster counterclockwise (S) and the damping is softened.
3. Each damper in this kit is preset to "-14 clicks." This means that the damper is adjusted 14 clicks away from full stiff, which starts at 0. Counting up from full stiff is the preferred method of keeping track of, or setting, damping. This setting was developed on a 2010 Volkswagen T5.

For more information, refer to the User Guide.

fig. F.1

fig. F.2

Limited Warranty and Return Policy

Air Lift Company provides a 1-year limited warranty to the original purchaser of Air Lift Performance damper kits from the date of original purchase, that the products will be free from defects in workmanship and materials when used on vehicles as specified by Air Lift Company and under normal operating conditions, subject to the requirements and exclusions set forth in the full Limited Warranty and Return Policy that is available online at **www.airliftperformance.com/warranty**.

For additional warranty information contact Air Lift Company customer service.

Need Help?

The Air Lift Company customer service department is open from 8 a.m. to 8 p.m. ET Monday through Friday. Call (800) 248-0892 or (517) 322-2144 for calls from outside the U.S. and Canada.

CONNECT BY SEARCHING FOR **AIR LIFT PERFORMANCE** *#LIFEONAIR*

Thank you for purchasing Air Lift Performance products!

MADE IN USA WITH GLOBAL COMPONENTS

Air Lift Performance • 2727 Snow Road • Lansing, MI 48917 or P.O. Box 80167 • Lansing, MI 48908-0167
Toll Free (800) 248-0892 • Local (517) 322-2144 • Fax (517) 322-0240 • www.airliftperformance.com

Printed in the USA
JJC-1218

Kit 78672

Volkswagen T5/T6
(T26/T28/T30)

Rear Application

INSTALLATION GUIDE

For maximum effectiveness and safety, please read these instructions completely before proceeding with installation.

Failure to read these instructions can result in an incorrect installation.

MN-1079 • (011811) • ERN 9032

TABLE OF CONTENTS

A. Introduction

Air Lift Performance thanks you for purchasing the most complete, fully engineered high-performance air suspension made for the Volkswagen T5/T6. Read these installation instructions to correctly and safely set up the vehicle for a #lifeonair.

Air Lift assumes that the installer has the mechanical knowledge and ability to work on vehicle suspension systems and has basic tools necessary to complete a suspension replacement project.

Air Lift reserves the right to make changes and improvements to its products and publications at any time. For the latest version of this manual, contact Air Lift Performance at **(800) 248-0892** or visit **www.airliftperformance.com**.

An Air Lift Performance air management system is highly recommended for this product. Learn more at **air-lift.co/productlines**.

NOTATION EXPLANATION

Hazard notations appear in various locations in this publication. Information which is highlighted by one of these notations must be observed to help minimize risk of personal injury or possible improper installation which may render the vehicle unsafe. Notes are used to help emphasize areas of procedural importance and provide helpful suggestions. The following definitions explain the use of these notations as they appear throughout this guide.

DANGER — INDICATES IMMEDIATE HAZARDS WHICH WILL RESULT IN SEVERE PERSONAL INJURY OR DEATH.

WARNING — INDICATES HAZARDS OR UNSAFE PRACTICES WHICH COULD RESULT IN SEVERE PERSONAL INJURY OR DEATH.

CAUTION — INDICATES HAZARDS OR UNSAFE PRACTICES WHICH COULD RESULT IN DAMAGE TO THE VEHICLE OR MINOR PERSONAL INJURY.

NOTE — *Indicates a procedure, practice or hint which is important to highlight.*

B. Important Safety Notices

WARNING — DO NOT INFLATE AIR SPRINGS WHILE OFF OF THE VEHICLE. DAMAGE TO ASSEMBLY MAY RESULT AND VOID WARRANTY.

WARNING — DO NOT WELD TO OR MODIFY PERFORMANCE STRUTS/SHOCKS IN ANY WAY. DAMAGE TO UNIT MAY OCCUR AND WILL VOID WARRANTY.

CAUTION — AFTER INSTALLATION, ENSURE ALL ORIGINAL EQUIPMENT VEHICLE SAFETY FEATURES ARE PROPERLY CALIBRATED BY A QUALIFIED TECHNICIAN. CHANGING VEHICLE HEIGHT MAY AFFECT FUNCTIONING OF SAFETY SENSORS AND CAMERAS.

C. Installation Diagram

⚠ CAUTION

THIS KIT REQUIRES THE REMOVAL OF FACTORY TORQUE-TO-YIELD BOLTS. THESE BOLTS ARE DESIGNED TO BE REPLACED AFTER THEY HAVE BEEN LOOSENED. TORQUE-TO-YIELD BOLTS ARE INDICATED IN THE INSTRUCTIONS AND IN THE TORQUE SPECIFICATION CHART.

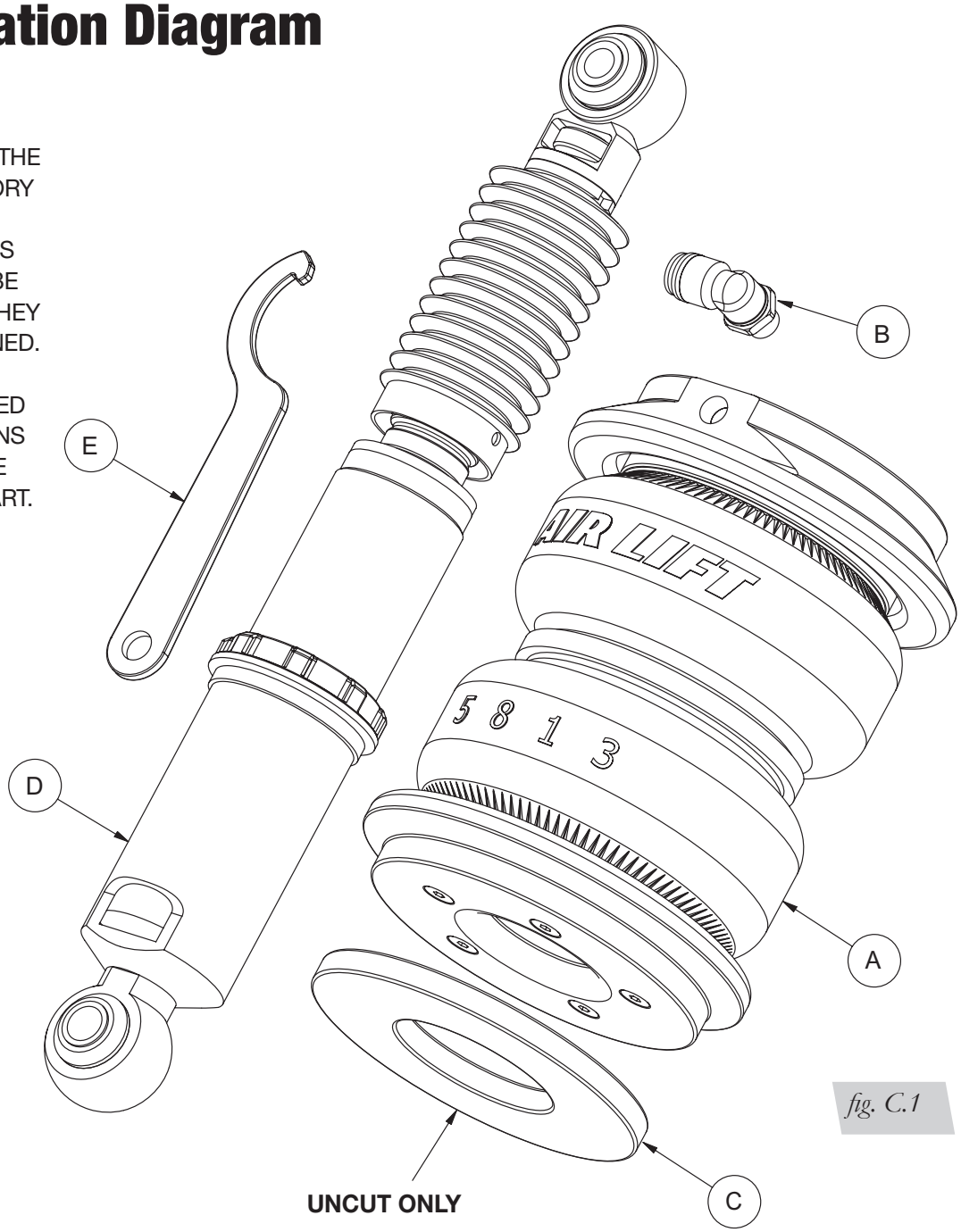

fig. C.1

HARDWARE LIST

Item	Part #	Description	Qty
A	58553	Air spring	2
B	21851	1/4 MNPT x 3/8 PTC elbow	2
C	13324	Lower spacer	2
D	26877	Rear shock	2
E	11289	Spanner wrench	1

TORQUE-TO-YIELD BOLTS*

Description	Qty
Upper shock bolts	2
Lower shock bolts	2

* These bolts are not included with this kit

STOP! Missing or damaged parts? Call Air Lift customer service at (800) 248-0892 for a replacement part.

D. Installing the Air Suspension

NOTE *See "Important Safety Notices" on page 2.*

PREPARING THE VEHICLE

1. Elevate and support the vehicle with a hoist or safety stands.
2. Remove the rear wheels (Fig. D.1).

fig. D.1

REMOVING THE REAR SUSPENSION

1. Support the hub and unbolt the lower shock bolt. Lower the hub until spring is loose (Figs. D.2 & D.3).

fig. D.2

fig. D.3

2. Remove the coil spring, rubber spring isolators, and rubber bumper (Figs. D.4 & D.5).

fig. D.4

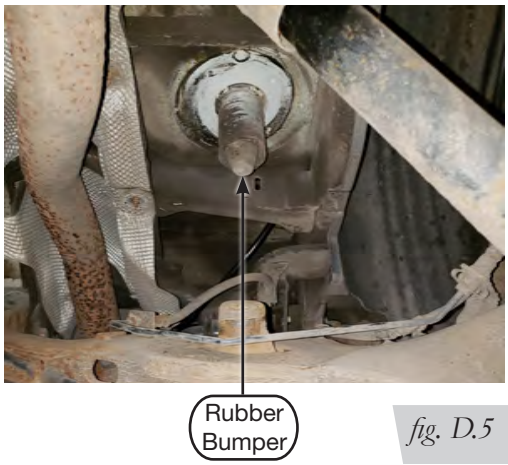

fig. D.5

3. Support the exhaust and disconnect the two hangers closest to the rear shock. Lower exhaust enough to access the upper shock bolt. (Figs. D.6 & D.7).

fig. D.6

fig. D.7

4. Remove the upper shock bolt and remove from vehicle (Fig. D.8).

fig. D.8

5. Remove the rubber bumper from the upper spring bump.

REAR SUSPENSION MODIFICATIONS

NOTE *If maintaining OEM spring seats, proceed to Adjusting Air Spring and Shock for Unmodified Chassis.*

1. Measure and mark 45mm down upper spring bump from the chassis. Cut spring bump at this mark (Fig. D.9).

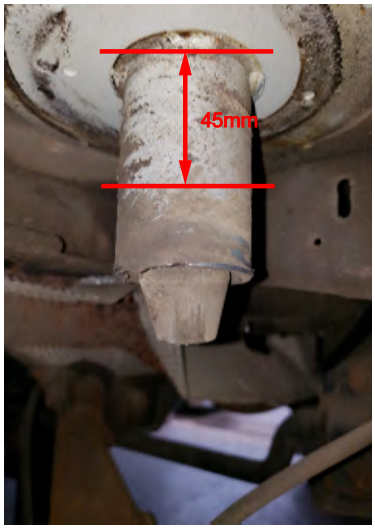

fig. D.9

2. Measure and mark 35mm up the lower spring bump from the control arm flat. Cut spring bump at this mark. Remove spring locating lug (Figs. D.10 & D.11).

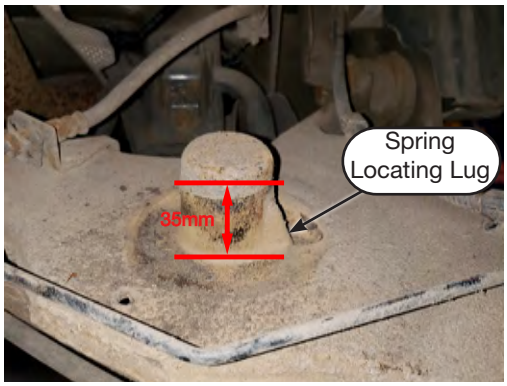

fig. D.10

fig. D.11

ADJUSTING AIR SPRING AND SHOCK FOR UNMODIFIED CHASSIS

1. Lift and rotate air spring piston to secondary keyway. Push piston down until stopped at bottom of keyway (Fig. D.12).

fig. D.12

2. Hold lower bushing in vise and loosen damper locking collar. Thread the damper out until measuring as shown. Torque 1/4 turn beyond hand tight. (Figs. D.13 & D.14).

fig. D.13

fig. D.14

INSTALLING THE AIR SUSPENSION

1. Apply thread sealant to the threads of the fitting. Tighten fitting into air spring 1 3/4 turns beyond hand-tight with flats parallel with mount (Fig. D.15).

fig. D.15

2. If opting for the unmodified chassis, place the spring spacer around the lower spring bump. If modified, move to next step without installing the lower spring spacer (Fig. D.16).

fig. D.16

3. Apply the air spring assembly over the spring seats with the air fitting at the top (Fig. D.17).

fig. D.17

4. Attach the shock upper and lower bolts. Torque at ride height (Figs. D.18 & D.19).

fig. D.18

fig. D.19

5. Reattach the exhaust hangers. Torque to 20Nm (15 lb.-ft.).

ROUTING THE AIR LINES

1. Fully compress the suspension using a jack. With the suspension compressed, review the best routing for the leader line that is clear of all suspension components and axle.
2. Routing should also allow for the suspension to extend without kinking or pulling the line tight or rubbing on other components. Following the brake line routing is often a good place to start. Check clearances to all other components.

⚠ WARNING

AFTER INSTALLATION, ENSURE ALL ORIGINAL EQUIPMENT VEHICLE SAFETY FEATURES ARE PROPERLY CALIBRATED BY A QUALIFIED TECHNICIAN. CHANGING VEHICLE HEIGHT MAY AFFECT FUNCTIONING OF SAFETY SENSORS AND CAMERAS.

E. Finished Installation Photo

fig. E.1

F. Before Operating

SETTING THE RIDE HEIGHT

1. Refer to the User Guide supplied with this kit to set up the suspension.

Torque Specifications			
Location	TTY	Nm	Lb.-ft.
*Upper shock bolts	✓	80 + 90 degrees	59 + 90 degrees
*Lower shock bolts	✓	120 + 180 degrees	89 + 180 degrees
Lower roll plate bolts		7	5
Exhaust hanger bolts		20	15
Wheel bolts	Factory Specification		
Damper locking collar	45 degrees beyond hand tight		
Air line and fitting	1 and 3/4 turns beyond hand tight with thread sealant		

* Torque-to-yield bolts

Table 1

⚠ CAUTION

TORQUE-TO-YIELD BOLTS ARE DESIGNED TO BE REPLACED AFTER THEY HAVE BEEN LOOSENED.

Suggested Driving Air Pressure	Maximum Air Pressure
35-50 PSI (2.4-3.4 BAR)	**125 PSI (8.6BAR)**
FAILURE TO MAINTAIN ADEQUATE MINIMUM PRESSURE (OR PRESSURE PROPORTIONAL TO LOAD) MAY RESULT IN EXCESSIVE BOTTOMING OUT AND **WILL VOID THE WARRANTY**.	

Table 2

CHECK FOR BINDING

1. Inflate and deflate the system (do not exceed 125 PSI [8.6BAR]) to check for clearance or binding issues. With the air springs deflated, check clearances on everything so as not to pinch brake lines, vent tubes, etc. Clear lines if necessary.
2. Inflate the air springs to 75-90 PSI (5.2-6.2BAR) and check all connections for leaks.

⚠ CAUTION

MAKE SURE THE FRONT WHEELS ARE STRAIGHT WHEN DEFLATING AND REINFLATING AIR SPRINGS.

INSTALLATION CHECKLIST

- ☐ **Clearance** — Inflate the air springs to 75-90 PSI (5.2-6.2BAR) and make sure there is at least 1/2” (13mm) clearance from anything that might rub against the air spring. This should be checked with the air spring fully inflated and fully deflated.
- ☐ **Leak** — Inflate the air springs to 75-90 PSI (5.2-6.2BAR) and check all connections for leaks. All leaks must be eliminated before the vehicle is road tested.
- ☐ **Heat** — Be sure there is sufficient clearance from heat sources, at least 6" (152mm) from air springs and air lines. If a heat shield was included in the kit, install it. If there is no heat shield, but one is required, call Air Lift customer service at **(800) 248-0892**.
- ☐ **Fastener** — Recheck all bolts for proper torque.
- ☐ **Road** — Inflate the springs to recommended driving pressures (Table 2). Drive the vehicle 10 miles (16km) and recheck for clearance, loose fasteners and air leaks.
- ☐ **Operating instructions** — If professionally installed, the installer should review the operating instructions with the owner. Be sure to provide the owner with all paperwork that came with the kit.

DAMPING ADJUSTMENT

1. The dampers in this kit have 30 settings, or “clicks,” of adjustable compression and rebound damping characteristics. Damping is changed through the damper rod using the supplied adjuster (Fig. F.1) or a 3mm hex key (not included).
2. Turn the adjuster clockwise (H) and the damping settings are hardened, reducing oscillations and body motion. Turn the adjuster counterclockwise (S) and the damping is softened.
3. Each damper in this kit is preset to “-16 clicks.” This means that the damper is adjusted 16 clicks away from full stiff, which starts at 0. Counting up from full stiff is the preferred method of keeping track of, or setting, damping. This setting was developed on a 2010 Volkswagen T5.

For more information, refer to the User Guide.

fig. F.1

Limited Warranty and Return Policy

Air Lift Company provides a 1-year limited warranty to the original purchaser of Air Lift Performance damper kits from the date of original purchase, that the products will be free from defects in workmanship and materials when used on vehicles as specified by Air Lift Company and under normal operating conditions, subject to the requirements and exclusions set forth in the full Limited Warranty and Return Policy that is available online at **www.airliftperformance.com/warranty**.

For additional warranty information contact Air Lift Company customer service.

Need Help?

The Air Lift Company customer service department is open from 8 a.m. to 8 p.m. ET Monday through Friday. Call (800) 248-0892 or (517) 322-2144 for calls from outside the U.S. and Canada.

Connect by searching for **Air Lift Performance** *#LifeonAir*

Thank you for purchasing Air Lift Performance products!

MADE IN USA WITH GLOBAL COMPONENTS

Air Lift Performance • 2727 Snow Road • Lansing, MI 48917 or P.O. Box 80167 • Lansing, MI 48908-0167
Toll Free (800) 248-0892 • Local (517) 322-2144 • Fax (517) 322-0240 • www.airliftperformance.com

Printed in the USA
JJC-1218